A. u. K. Müller

Solenoid valves
Control valves
Special valves and systems

A.u.K. Müller GmbH & Co. KG
Dresdener Str. 162
D-40595 Düsseldorf/Germany

Tel.: +49(0)211-7391-0
Fax: +49(0)211-7391-281

e-mail: info@akmueller.de
Internet: www.akmueller.de

Series CF-13

Characteristics

- Water distribution and merge of medium paths
- Applicable for hot water
- Easy installation due to manually releasable swivel nut
- Nominal orifice DN 13 for high throughput, whilst maintaining minimal pressure losses
- Long term performance capability
- Optional with strainer, flow regulator or check valves

Applications

- Hot / cold drink dispensers
- Industrial appliances
- Cleaning systems
- Washing machines
- Dish washers
- Agricultural implements

Possible approvals

Approved versions available on request:

- KTW/W270 (cold water)
- WRAS (65 °C)
- Others on request

Description

Manifolds with nominal orifices of DN 13, for flexible realization of water paths.

Whether you build the components into a new design or retrofit it into existing equipment, sufficient installation space assumed, it provides a simple method of adding new media paths or connection possibilities for components such as valves, push-fit connectors or outlet nozzles.

The manifolds are ideally suitable for virtually any type of water distribution or merger. The standard connection thread sizes allow integration into numerous applications. Installation is made easy by manually releasable swivel nuts.

The internal diameter of the manifolds with Ø 13 mm ensures a high throughput, whilst maintaining minimal pressure losses.

Optionally the integration of strainer, flow regulators or check valves is possible.

Various outlet nozzles are offered as accessories.

Accessories

CF-H

© copyright A.u.K. Müller, subject to changes without prior notice

Series CF-13

Materials

Valve body	PA 66 glass fibre reinforced
Sealings	EPDM

Technical Data

Type	manifold, DN 13	
Fitting position	any	
Media	cold and heated potable water and physically and chemically similar media	
T-Medium	90 (194	°C max. °F max.)
DN	13	mm
p-Operating	0 - 10 (0 - 145	bar psi)
Burst pressure	65 (943	bar psi)

CF-13 2MFO, manifolds DN13		ID
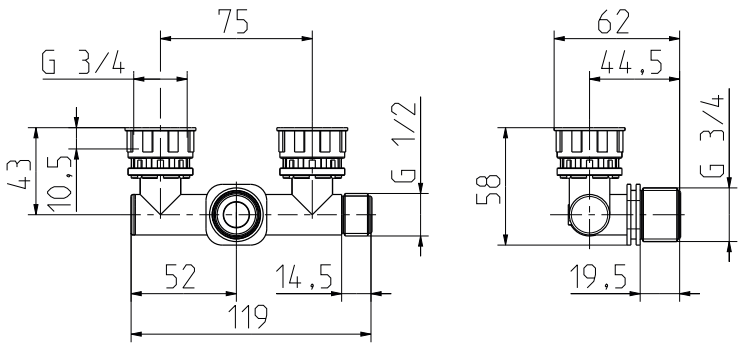		007912

CF-13 2MFC, manifolds DN13		ID
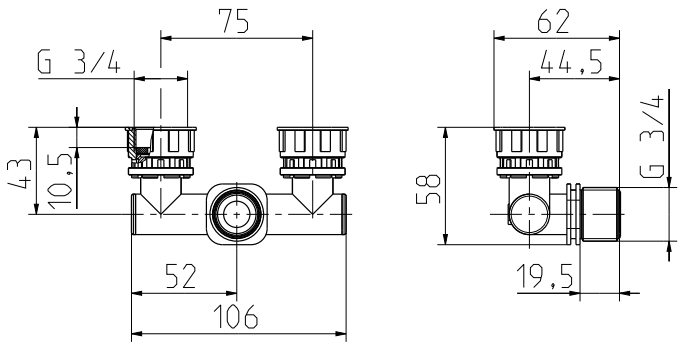		008121

© copyright A.u.K. Müller, subject to changes without prior notice

Options for G 3/4 male thread of CF-13 components.

Strainers

	Material	Mesh size [mm]	T-medium [°C]	ID
A	POM	0,45	65	000811
B	Stainless steel	0,25	90	005452
C		0,50	90	003721

Flow regulators

	Material	Type	T-medium [°C]	Nominal flow rate from - to [l/min]
D	POM / EPDM	MR 04	65	5,0 - 20,0
E	POM / EPDM	MR 06	60	0,5 - 9,0
F	PEI / EPDM	MR 19	90	3,0 - 22,0

Check valves

	Material	T-medium [°C]	ID
G	POM	65	005771

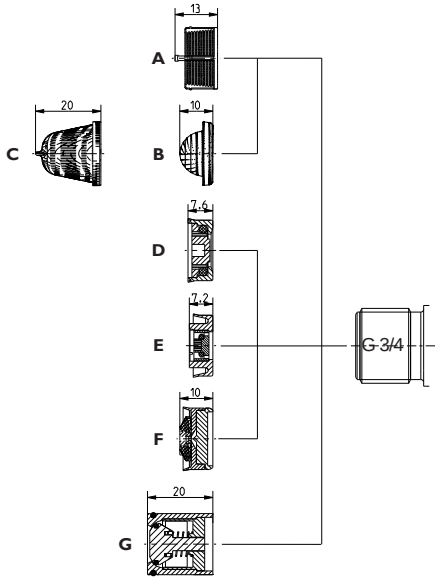

Please clarify the applicability and approvals of each aforemetioned component with us.

Flange as mounting support
(Please see separate datasheet also)

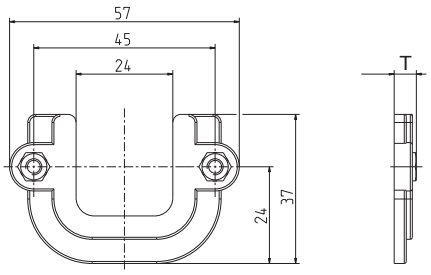

ID	Depth
	T
001245	4,6
001246	5,5

© copyright A.u.K. Müller, subject to changes without prior notice

Accessories: CF-H threaded nozzles

Materials

Swivel nut	PA 66 glass fibre reinforced
Spout and step reducer	PA 6/6 glass fibre reinforced
Seal	EPDM

The outlet nozzles are available with different spouts, with and without a ribbing contour. The ribbing of the connecting pieces ensures a secure fit of the connected hose. However, an additional securing of the connection point by a hose clamp may be required.

Technical Data

Type	connector fitting	
Construction	straight connector (0°) elbow connector (90°)	
Fitting position	any	
Media	cold and heated potable water and physically and chemically similar media	
T-Medium	90 (194	°C max. °F max.)
T-Ambient	5 - 70 (41 - 158	°C °F)
p-Operating	0 - 10 (0 - 145	bar psi)
Strength	according to EN 61770	

Options

	Inlet	Drawings and dimensions		Outlet		ID
				Connection	Inner diameter Ø	
CF-H S	G 3/4	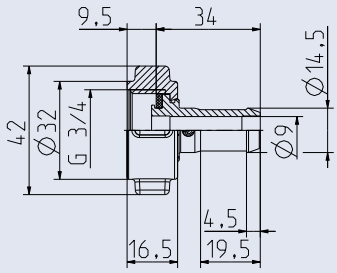		1/2 " Ø 14,5 mm	9	**009682**
CF-H S	G 3/4	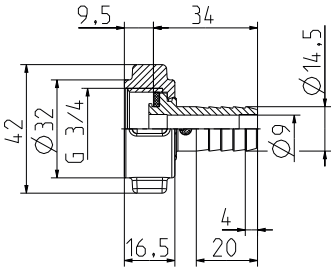		1/2 " Ø 14,5 mm	9	**009683**
CF-H S	G 3/4	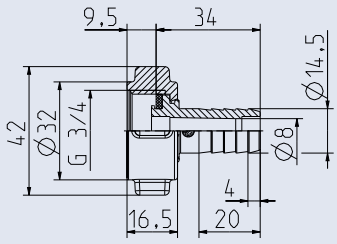		1/2 " Ø 14,5 mm	8	**009684**
CF-H S	G 3/4	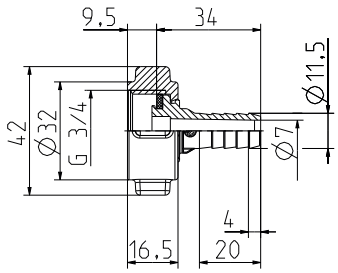		3/8 " Ø 11,5 mm	7	**009685**

 © copyright A.u.K. Müller, subject to changes without prior notice

	Options					
	Inlet	Drawings and dimensions		Outlet		ID
				Connection	Inner diameter Ø	
CF-H L	G 3/4	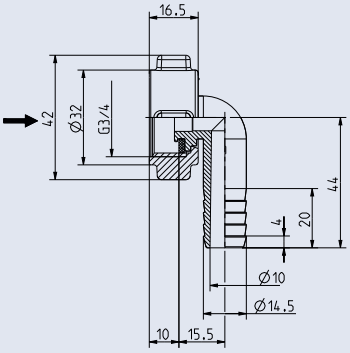		1/2 " Ø 14,5 mm	10	**009686**
CF-H L	G 3/4	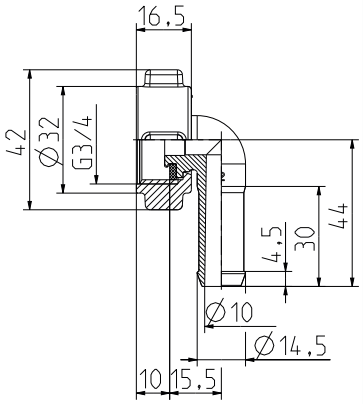		1/2 " Ø 14,5 mm	10	**009687**
CF-H G	G 3/4	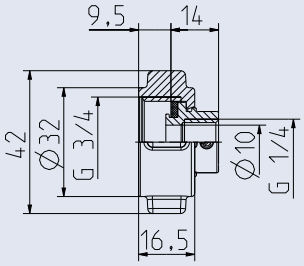		G 1/4 female	10	**009688** on request
CF-H G	G 3/4	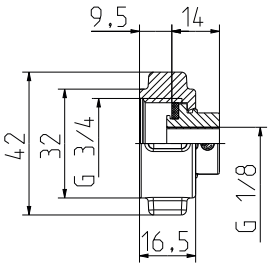		G 1/8 female		**009689** on request

© copyright A.u.K. Müller, subject to changes without prior notice

Solenoid valves
Control valves
Special valves and systems

A. u. K. Müller GmbH & Co. KG
Dresdener Str. 162
D-40595 Düsseldorf/Germany

Tel.: +49(0)211-7391-0
Fax: +49(0)211-7391-281

e-mail: info@akmueller.de
Internet: www.akmueller.de

© copyright A.u.K. Müller, subject to changes without prior notice