Product Information

Float valve, DN 13 with vertical guide float

Series 21.013.126 lin

PE Foam

patented EP 1 626 215 A1

Description

This servo-controlled valve has an orifice size of 13 mm and is operated by means of a float to control the level in a tank.

If liquid is drained from the tank, the float valve opens automatically and then closes when the maximum level has been reached.

Whilst the water level and float rise, the flow into the tank is reduced proportionally to the float arm position. This helps to prevent overflow during the initial filling of small tanks when there is a greater level of liquid turbulence.
When reaching the maximum level in the tank, the float lever will be lifted faster ensuring a full flow for longer. It then has a shorter closing time, which in turn significantly reduces dripping of the valve during this operation.

Valves of this design are single chamber valves with the inlet and outlet in line.
The valve has a glass fibre reinforced polyamid body and can be manufactured with various connection ports. It is suitable for use with medium temperatures of up to 60 °C when specified with a PE-float.

Applications

- tank filling
- rain water utilisation
- water treatment

A.u.K. Müller

Solenoid valves
Control valves
Special valves and systems

A.u.K. Müller GmbH & Co. KG
Dresdener Str. 162
D-40595 Düsseldorf/Germany

Tel.: +49(0)211-7391-0
Fax: +49(0)211-7391-281

e-mail: info@akmueller.de
Internet: www.akmueller.de

Characteristics

- servo-controlled
- designed for narrow and deep tanks
- reduced dripping of the valve during closing due to a shorter closing time
- medium temperature up to 60 °C (140 °F)
- long term performance capability
- high operating safety by the use of high quality materials and 100% final testing of the products
- two float shapes

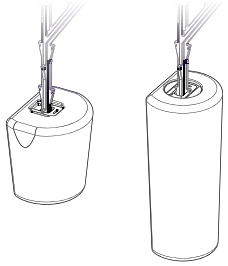

PE Foam PS Foam

typical performance curve

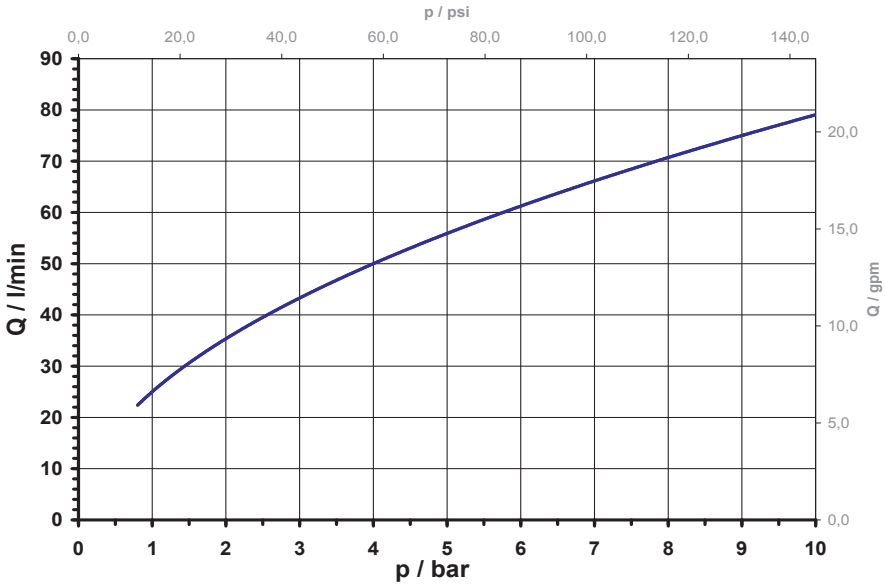

Float valve, DN 13
with vertical guide float

A.u.K. Müller

Series 21.013.126 lin

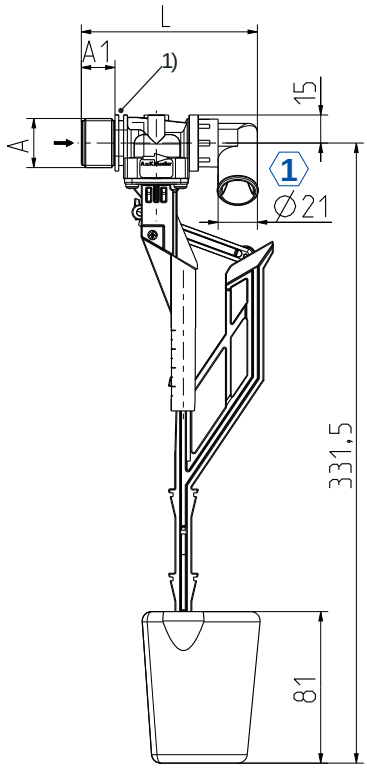

PE Foam

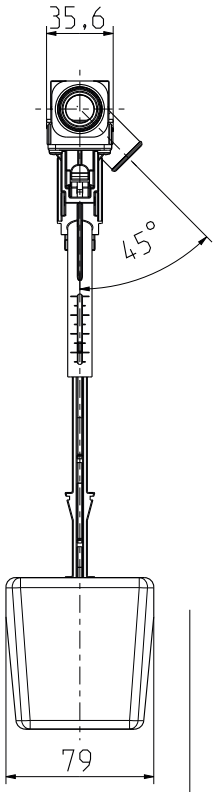

1) Fixing groove

Technical Data

Type	float valve	
Construction	2/2-way single chamber straight valve, elbow nozzle at outlet, servo-controlled	
Function	closed by buoyancy of float	
Fitting position	float pointing downwards	
Media	cold and heated potable water and physically and chemically similar media	
T-Medium PE Foam PS Foam	 60 30	 °C max. °C max.
T-Ambient	as per T-Medium	
DN	13	mm
p-Operating	0,8 - 10	bar
Cv-value	25	l/min
Flow regulator	on request	
Float body	position adjustable	

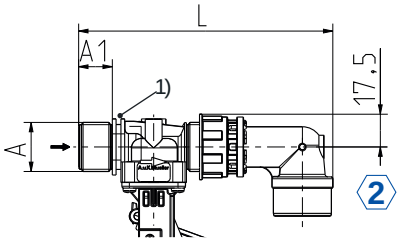

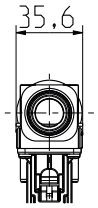

Materials

Valve body	PA 66 glass fibre reinforced
Float guide	POM and PA 66 glass fibre reinforced
Float body	PE Foam PS Foam
Membrane and sealings	EPDM NBR (on request) VMQ (on request)
Filter	stainless steel (in inlet)

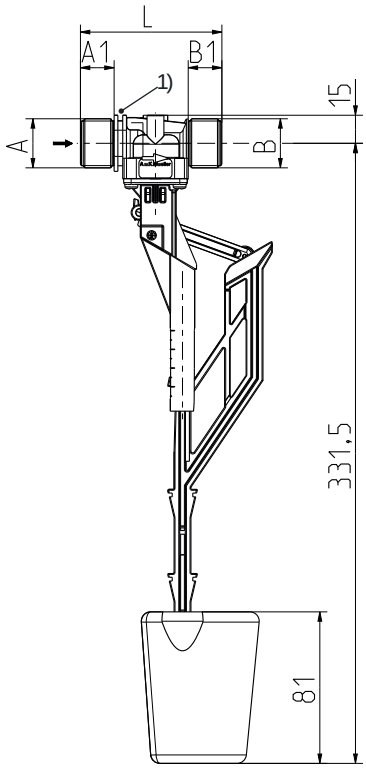

PE Foam

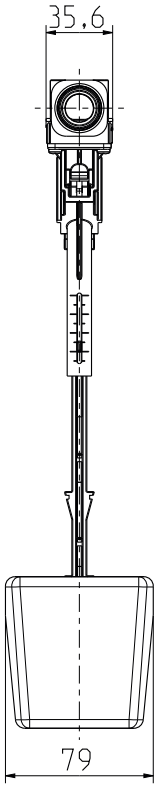

Options

Material	Inlet		Outlet		Length
	Ø A	A1	Ø B	B1	L
PA 66	G 3/4	18	elbow nozzle 1	-	94
PA 66	G 3/4	18	elbow nozzle 2	-	136
PA 66	G 3/4	18	G 3/4	18	76
PA 66	G 1/2	15	G 1/2	15	70

Float valve, DN 13 with vertical guide float

A.u.K. Müller

Series 21.013.126 lin

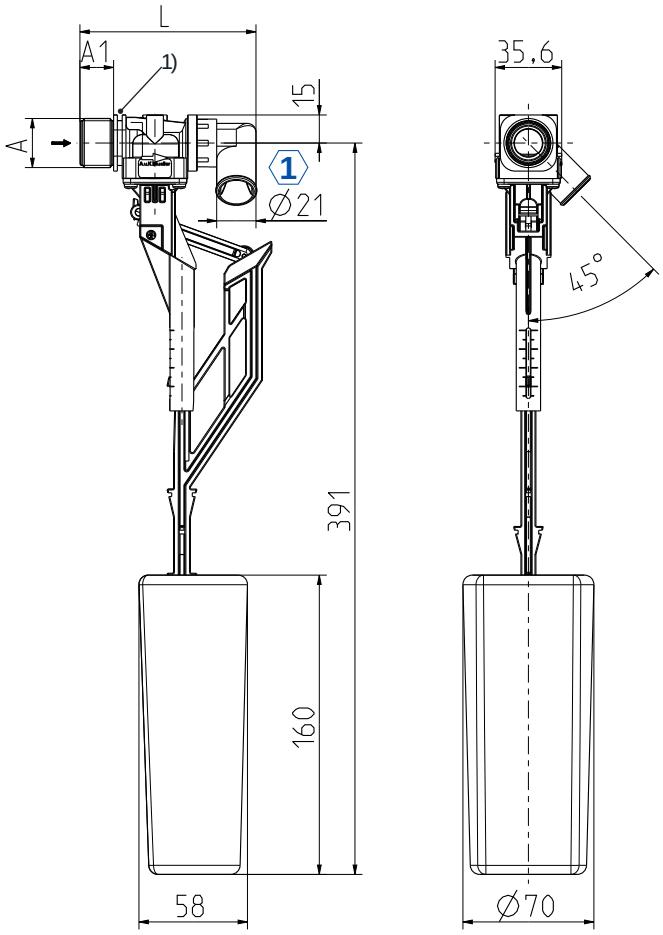

PS Foam

1) Fixing groove

Depending on the geometry of the tank violent movements of the water surface can occur and influence the standard float (PE Foam) in such a way, that the flow rate at the outlet of the valve fluctuates greatly in rhythm with the wave motion inside the tank.

This special float (PS Foam) allows for a steadier filling of the tank.

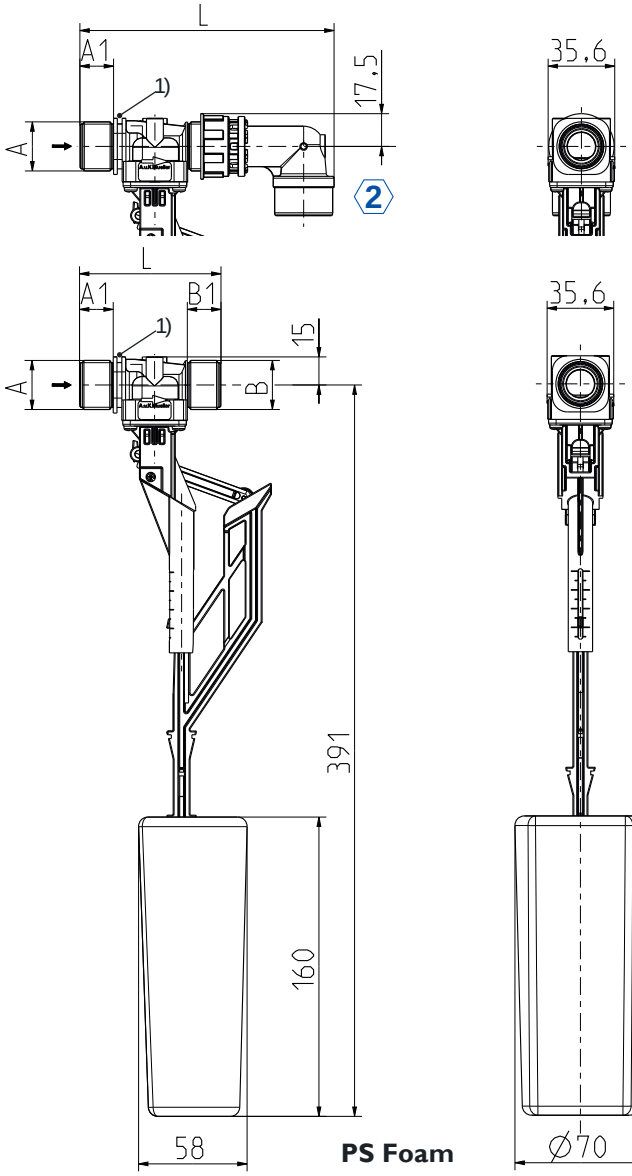

PS Foam

Series 21.013.126 lin

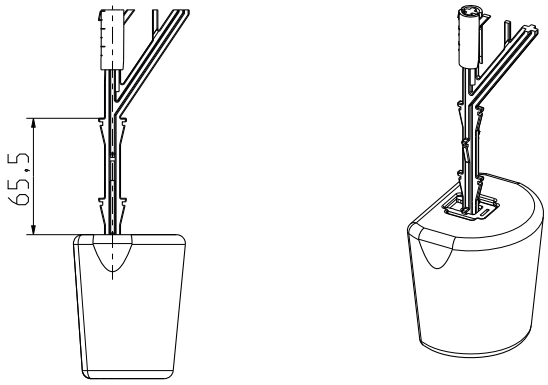

Float valve DN 13 with vertically guided float. The float can be fixed in four different positions.

(1)
Locate the float (PE Foam) clip in the appropriate notch at the desired height.

(2)
Move the float up, until the clip is completely seated in the cavity.

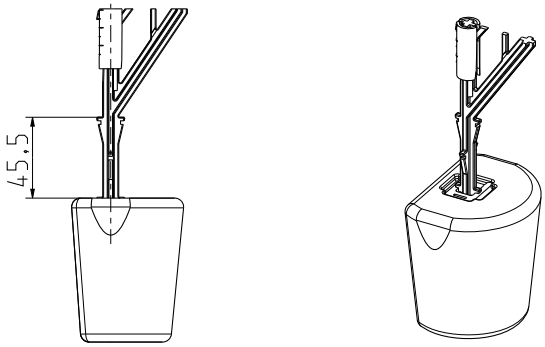

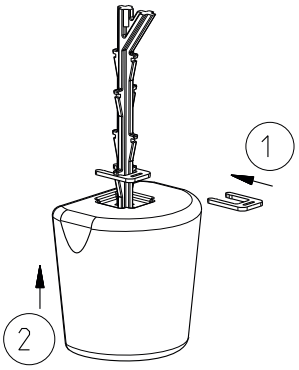

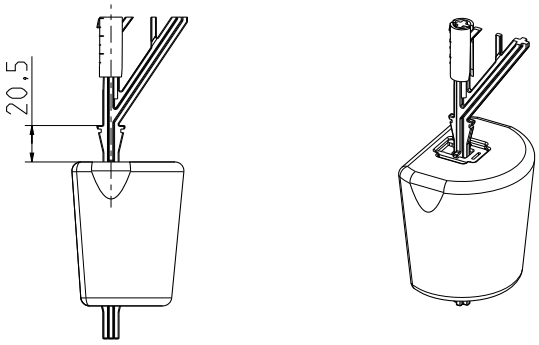

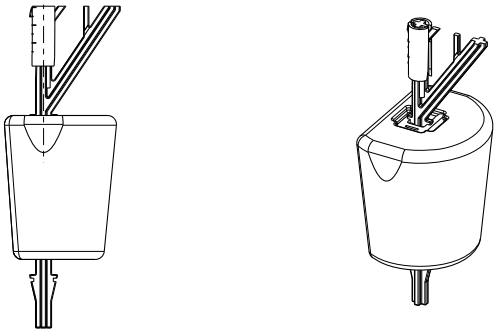

Float valve, DN 13 with vertical guide float

A.u.K. Müller

Series 21.013.126 lin

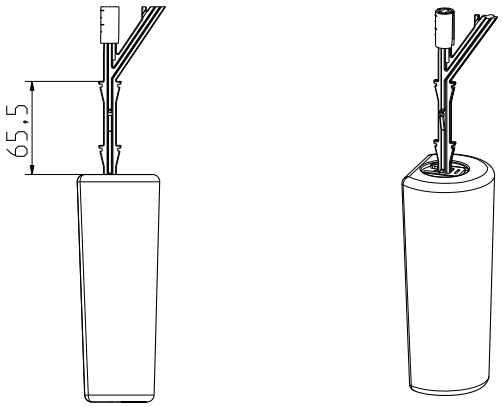

Float valve DN 13 with vertically guided float. The float (PS Foam) can be fixed in four different positions.

1
Insert the cushioning weight into the cavity on top of the float with the groove positioned in the direction of the retaining clip inserted later.

2
Locate the float clip in the appropriate notch at the desired height.

3
Move the float up, until the clip is completely seated in the cavity of the cushioning weight.

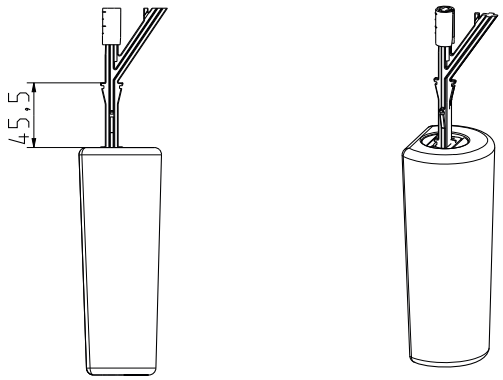

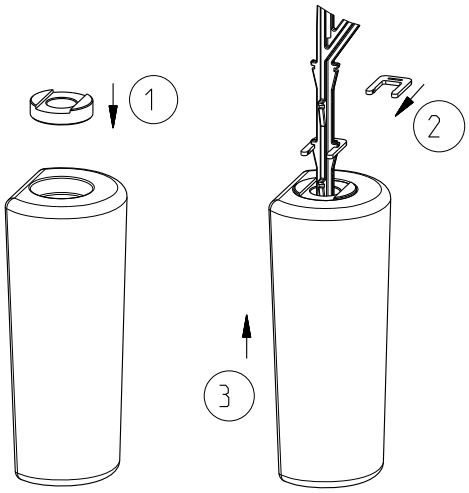

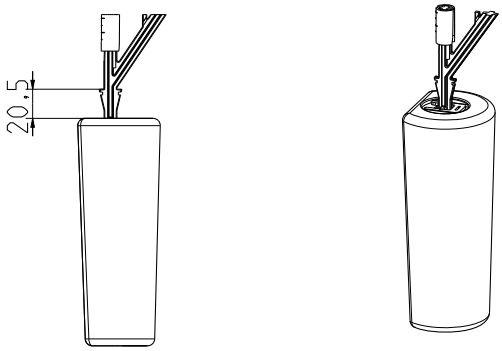

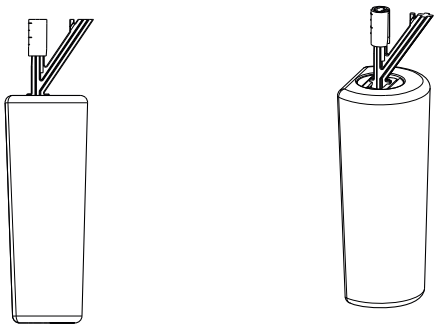

Float valve, DN 13
with vertical guide float

A.u.K. Müller

Series 21.013.126 lin

Threaded outlet

Outlet with elbow nozzle

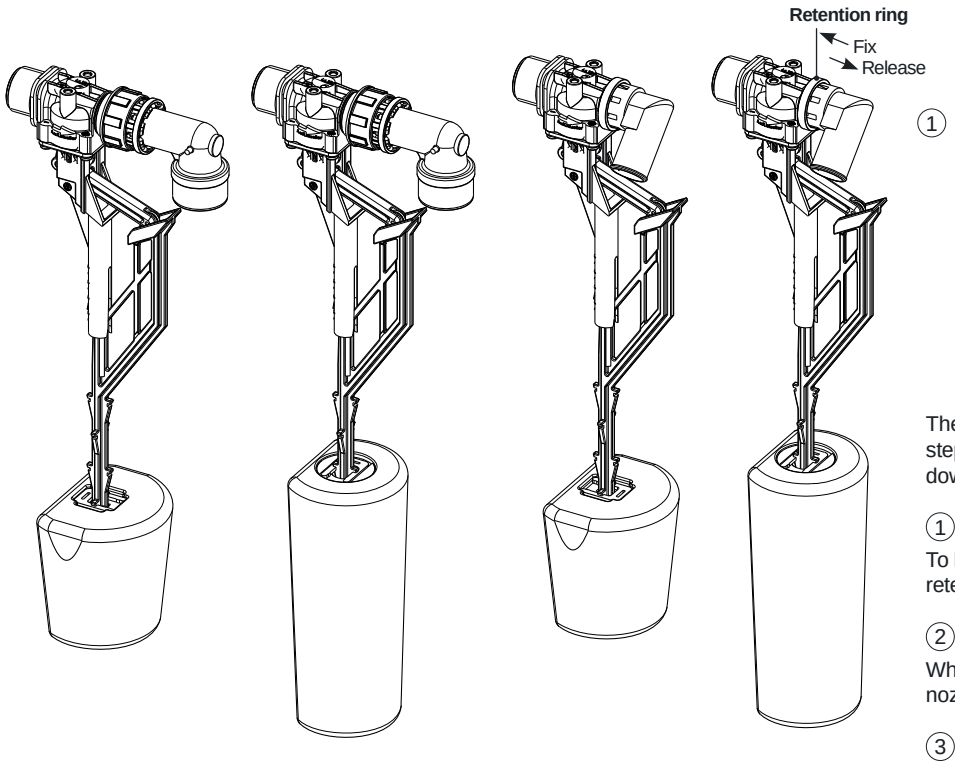

The elbow outlet nozzle can be rotated in 45º steps. However it should not point vertically downwards over the lever or float.

1
To locate or release the elbow nozzle, slide the retention ring as illustrated.

2
When the retention ring is released, the elbow nozzle can be removed.

3
Rotate the elbow nozzle to the desired position and relocate it with the lug on the valve outlet seated into one of the notches on the elbow. Slide the retention ring back into place.

Option:
Elbow nozzle with aerator