YOUR RELIABLE PARTNER

SITEX D2506

Portable X-Ray Generators

TELEDYNE ICM
Everywhereyoulook™
Part of the Teledyne Imaging Group

SITEX

Quality, Performance, Ruggedness

DIRECTIONAL, PANORAMIC & CRAWLER

IP 65

50 TO 360 KV

RUGGEDIZED

AUTO-CORRECTION X-RAY BEAM

FEATURES

	Unit	SITEX D2506
BEAM	-	Directional
POWER SUPPLY	-	Mains
Output voltage range	kV	70 to 250
Tube current range	mA	1 to 6
Tube current at full output	mA	6.0
Maximum power at the anode	W	N.A.
Constant power mode	-	No
Working cycle at 30°C (*)	%	100
Steel penetration	mm/in	54 / 2.1 ***
Weight (exluding hand rings)	Kg/lbs	28 / 61.7
Overall dimensions	mm/in	Ø346 x 771 / 13.6 x 30.4
Leakage dose at 1 m at full output	mSv/h	< 10
Optical focal spot according to EN 12543	mm/in	2.5 x 2.5 / 0.1 x 0.1
Maximum useful angle	°	60 x 40 elliptical
Inherent filtration	mm/in	2.5(Al)+0.4(Ni)/0.1+0.02
Waterproof level	-	IP65
Operating temperature	°C/F°	-25 to +70 / -13 to +158
Storage temperature	°C/F°	-40 to +80 / -40 to +176
Guard rings	-	2

(*) 700 mm FFD, 10 min , AA400, D=2 for CPD

SCU

	Unit	SCU 2.0
Supply voltage range	VAC	90 to 264
Supply frequency range	Hz	45 to 66
Maximum input power	kVA	2
Cos(phi) / power factor at full power 230Vac	-	0.98 / 0.98
Type of power supply	-	Mains, generator set, inverter
kV accuracy	%	± 0.5
mA accuracy	%	± 0.5
kV selection step	kV	1
mA selection step	mA	0.1
Time selection step	s	1
Timer range	min:sec	00:15 to 99:59
Operating weight	Kg/lbs	14.6 / 32.2
Overal size	mm^3/in^3	355/14 (W) x 157/6 (H) x 525/20.7 (D)
Operating temperature range	°C/F°	-25 to +55 / -13 to 131
Storage temperature range	°C/F°	-40 to +80 / -40 to 176
Ingress protection	-	IP65
System	-	Industrial PC boards
Control of mains voltage and frequency	-	Yes
Control of ambient temperature	-	Yes
Logging of shots history	-	Yes
Pre-warning time	s	3 to 99
Pilot light indicators	-	3 (green, red, yellow)
Independent START and STOP buttons	-	YES
Two positions safety key rotary switch	-	Stanby - X-ray
Two position main rotary switch	-	Mains On-Off
Vacuum Fluorescent Display	Line x char.	2 x 20 with anti-reflection screen

DRAWINGS

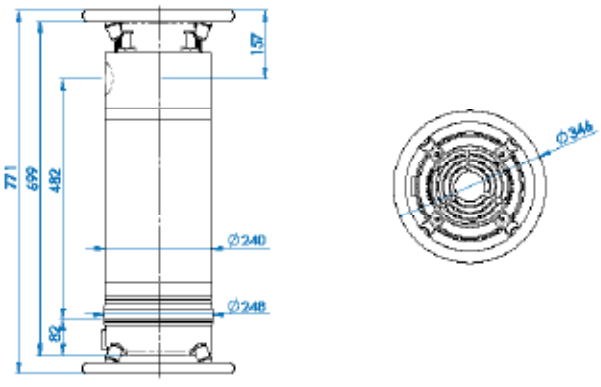

ACCESSORIES

ALUCASE

FLASHING LIGHT

TRIPOD

All specifications are non contractual and subject to change without prior notice.

TELEDYNE ICM

Zoning Les Plenesses / Rue Du Progrès 3 / B-4821 Andrimont (Dison) - Belgium

+32 (0)87 44 01 50 / icm.sales@teledyne.com

TELEDYNE ICM
Everywhereyoulook™
Part of the Teledyne Imaging Group