ROHRBEFESTIGUNGEN

Hammerschmid GmbH

product catalogue

A-4614 Marchtrenk | Linzer Straße 141 | tel. 0043 7243 / 58 222 | fax 0043 7243 / 58 222 800 | e-mail: office@hammerschmid.at | www.hammerschmid.at

2015

TÜV AUSTRIA

CE EN 1090-1:2009 zertifiziert

EDELSTAHL IS Rost frei

CERTIFICATE

TÜV AUSTRIA

ZERTIFIKAT | CERTIFICATE | CERTIFICAT | CERTIFICADO | СЕРТИФИКАТ | شهادة | 证书 | 인증서

Management system as per
EN ISO 9001:2008

In accordance with TÜV AUSTRIA CERT procedures, it is hereby certified that

ROHRBEFESTIGUNGEN
Hammerschmid
GmbH

Linzer Strasse 141
A-4614 Marchtrenk

applies a management system in line with the above standard for the following scope

systems for pipe attachments
light-weight steel-girder construction

Certificate Registration No. 20 100 5182

Valid until 2017-02-27

Certification Body
at TÜV AUSTRIA CERT GMBH

Vienna, 2014-03-20

This certification was conducted in accordance with TÜV AUSTRIA CERT auditing and certification procedures and is subject to regular surveillance audits.
TÜV AUSTRIA CERT GMBH Krugerstraße 16 A-1015 Wien www.tuv.at

Akkreditierung Austria
A
0943
ISO/IEC 17021

Vervielfältigung nur mit Erlaubnis des TÜV AUSTRIA | The reproduction of this document is subject to the approval by TÜV AUSTRIA

Certificate of Conformity
of the Factory Production Control

No. 0780-CPR-113045

In compliance with *Regulation (EU) No 305/2011 of the European Parliament and of the Council of 9 March 2011* (the Construction Products Regulation - CPR), this certificate applies to the construction products

Structural components of steel acc. EN 1090-2

Designation of products	Execution class	Declaration method
Welded, not welted and screwed steel elements with and without corrosion protection for pipe fixings, supports and suspensions	EXC 1 and EXC2	Method 3a or 3b ...

produced by

Rohrbefestigungen Hammerschmid GmbH
Linzer Straße 141
4614 Marchtrenk ▪ Austria

and produced in the manufacturing plant

Rohrbefestigungen Hammerschmid GmbH
Linzer Straße 141
4614 Marchtrenk ▪ Austria

This certificate attests that all provisions concerning the assessment and verification of constancy of performance described in Annex ZA of the harmonised standard

EN 1090-1:2009 + A1:2011

under system 2+ are applied and that

the factory production control (FPC) fulfils all the prescribed requirements.

This certificate replaces EC Certificate of FPC No. 0780-CPD-113045 first issued 2011-12-30. It will remain valid as long as the test methods and/or factory production control requirements included in the harmonised standard, used to assess the performance of the declared essential characteristics, do not change, and the construction products, and the manufacturing conditions in the plant are not modified significantly, lasted until 2019-12-02 unless suspended or withdrawn by the FPC certification body.

Nuremberg, 2014-12-02

TÜV Rheinland LGA Bautechnik GmbH
Tillystraße 2 ▪ 90431 Nürnberg ▪ Germany
Notified FPC Certification Body 0780

TÜV Rheinland LGA Bautechnik GmbH
TÜVRheinland LGA
Notified Body 0780 CPR

Dipl.-Ing. (FH) Günther Jost
Deputy Head of Certification Body

www.tuv.com

TÜVRheinland®
Precisely Right.

10/201 4.08 E A4 ® TÜV, TUEV and TUV are registered trademarks. Utilisation and application requires prior approval.

Marchtrenk, February 2015

RE: new products

- pipe clamp reinforced type SV till flat steel 150x20 mm — chapter pipe clamps

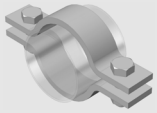

- pipe underlay type RUS and RUR for flat steel bolts — chapter u-bolts

- uninsulated pipe carriages type UGL, UFL and UFP
  type WGL, WFL and WFP — chapter pipe carriages

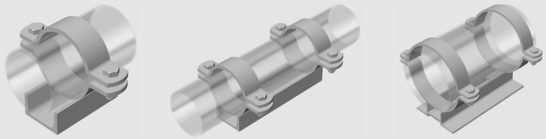

- support for vertical piping type TP — chapter pipe carriages

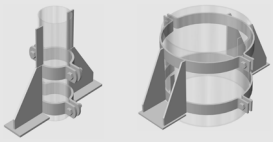

- pipe carriage PE for slide support type GL PE — chapter pipe carriages

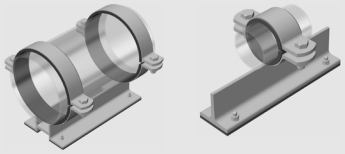

- guide rail type FL — chapter pipe carriages

- hanger itmes like vario hanger and socket tubes — chapter pipe hangers

The existing prices and product group discounts remain unchanged till 31.12.2015 under reserve.
All other agreements as payment, invoicing of the alloy surcharge as well as transport, etc. remain the same.

Subject to changes.

The price list 2015 provides a basis.

Hammerschmid Christian

technical guidelines for the calculation of the load values

1) general

- The listed load values are made under the assumption that in the pipe supports steel pipes in accordance with DIN 2448 are used or clamped.
- The measures of the clamps correspond to DIN 3567. In the delivery programme there are also special measures for special applications; these are marked correspondingly.
- In order to guarantee the capacity of the pipe carriage, these are to be mounted with the support structure in the centre of the carriage. With a large displacement path a dual clamp assembly is recommended.

2) load values

The capacities listed in the catalogue are calculated on the basis of and desgined for:

pipe supports made of material S235JR at 100 °C

correction factor with the following materials and temperatures:

material	100 °C	150 °C	200 °C	250 °C	300 °C	350 °C	400 °C	450 °C	500 °C
S235JR	1,00	0,85	0,79	0,71	0,58	-	-	-	-
P265 GH (H2)	-	-	0,83	0,74	0,66	0,60	0,55	0,49	-
16Mo3 (15Mo3)	-	-	0,91	0,82	0,72	0,68	0,64	0,62	0,60
13CrMo4-5 (13CrMo44)	-	-	0,98	0,93	0,87	0,81	0,77	0,72	0,70
X5CrNi18-10	0,66	0,60	0,54	0,50	0,47	0,44	0,42	0,40	0,39
X6CrNiMoTi17-12-2	0,79	0,74	0,70	0,66	0,62	0,60	0,57	0,56	0,55

3) dimensioning

The listed load values have been produced and verified on the basis of state-of-the-art technology. With simulation programmes based on the finite elements method the maximum capacity was established and flaws were corrected. The safety regarding yield strength of the material is 1,5 with the listed load values. The force engagement point is in the centre of the carriage or pipe, whereby the z-axis points downwards. The load values refer to the loading condition, whereby the force Fx, Fy, and Fz impact simultaneously. If the load into one direction ceases to apply, the maximum capacity for the remaining directions may be increased following a consultation with Hammerschmid‘s skilled staff. The force value for the x- and y-direction applies for both directions; the load value for the z-direction applies for the listed z-direction. If the force impacts in the opposite direction, the load specifications are negative.

4) special solutions

If requested we can design and produce any other type of pipe support.

exmaple of force application point

In order to point out how we interpret our statics we have pictured a force polygon below.

shear force accords Fx

lateral force accords Fy

bearing force accords Fz

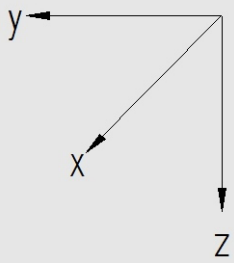

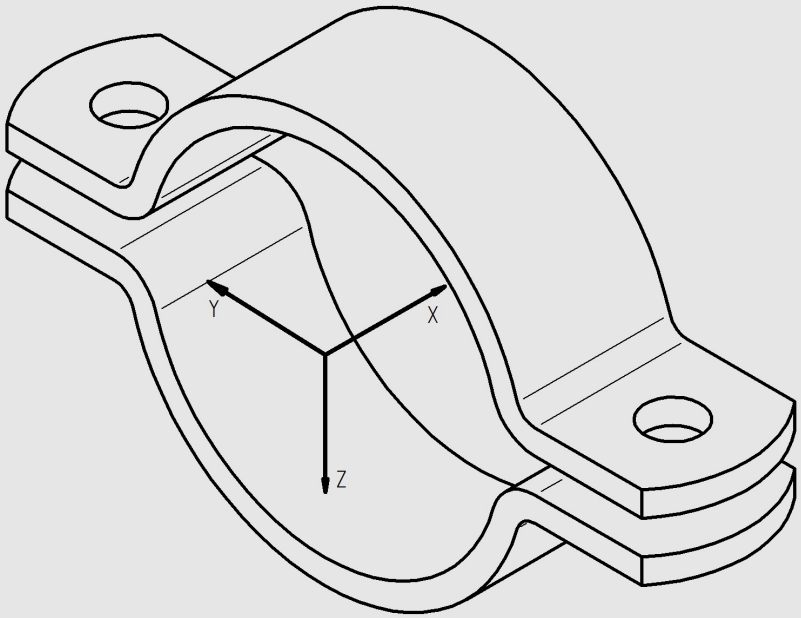

You can operate this system with all our products mentioned in this catalogue.

Image 1: Finite elemente model of a pipe carriage

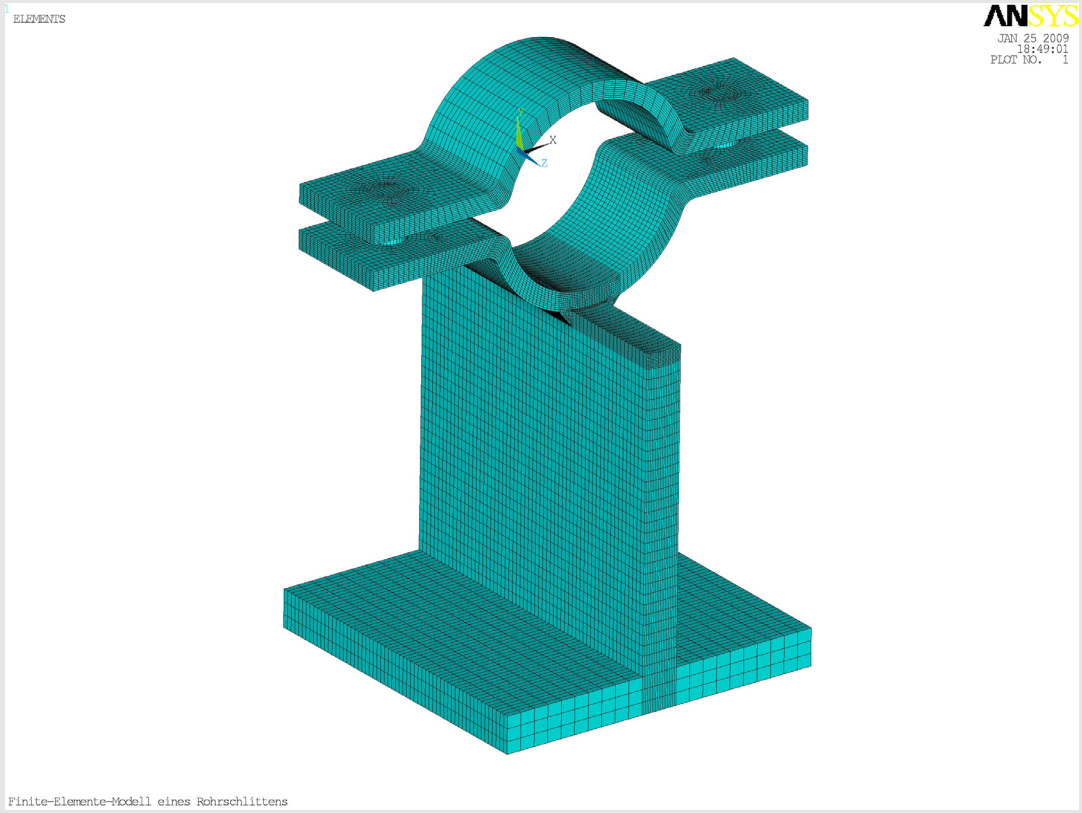

Image 2: stress distribution in the pipe carriage with lateral pressure

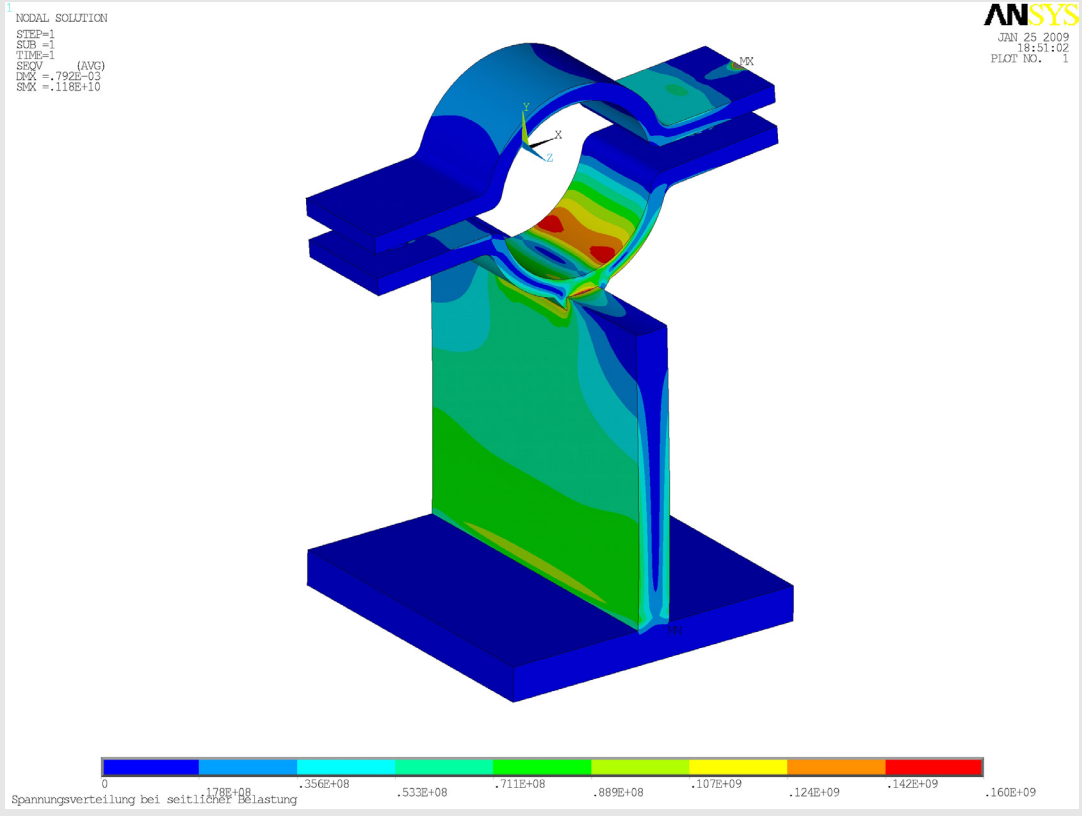

boiler tubes

according to DIN 2448
measures, weights

nominal diameter	inch	outside pipe diameter (mm)	wall thickness (mm)	weight/meter empty (kg/m)	weight/meter filled with water (kg/m)
15	1/2"	21,3	2,0	0,96	1,20
20	3/4"	26,9	2,3	1,41	1,80
25	1"	33,7	2,6	2,01	2,65
32	1 1/4"	42,4	2,6	2,70	3,91
40	1 1/2"	48,3	2,6	2,95	4,41
		51,0	2,6	3,12	4,77
		57,0	2,9	3,90	5,96
50	2"	60,3	2,9	4,14	6,47
		63,5	2,9	4,36	6,97
65	2 1/2"	76,1	2,9	5,28	9,16
		82,5	3,2	6,31	10,86
80	3"	88,9	3,2	6,81	12,15
		101,6	3,6	8,76	15,76
		108,0	3,6	9,33	17,31
100	4"	114,3	3,6	9,90	18,90
		127,0	4,0	12,20	23,32
		133,0	4,0	12,80	25,07
125	5"	139,7	4,0	13,50	27,12
		152,4	4,5	16,40	32,54
		159,0	4,5	17,10	34,76
150	6"	168,3	4,5	18,10	36,93
		177,8	5,0	21,30	43,40
		193,7	5,4	25,00	51,26
200	8"	219,1	5,9	31,00	64,73
		267,0	6,3	40,60	91,40
250	10"	273,0	6,3	41,60	95,40
		298,5	7,1	51,10	117,60
		318,0	7,1	57,40	129,50
300	12"	323,9	7,1	55,60	130,85
350	14"	355,6	8,0	68,58	159,00
400	16"	406,4	8,8	85,90	204,40
450	18"	457,0	10,0	110,24	260,22
500	20"	508,0	11,0	135,00	320,50
550	22"	559,0	12,5	168,47	392,40
600	24"	610,0	12,5	268,78	450,00

summary of norms

evidence of conformity	EN 1090-2	execution of steel structures and aluminium structures part 2: technical guidelines for the completion of steel structures
management of quality	DIN EN ISO 9000	norms of the modern quality management from the international recognised QM-series of standards
u-bolts	DIN 3570-A/ DIN 3570-B	u-bolts for pipes from DN 20 till 500
flat steel	EN 10058 (DIN 1017)	hot-rolled flat bars of steel for general use dimension, shape tolerances and limit deviations
band steel	EN 10048 (DIN 1016)	hot-rolled band steel - limit deviations and shape tolerances
wide flat steel	DIN 59200	hot-rolled wide flat steel - dimension, bulk, limit deviations, shape tolerances and limit deviations of the bulk
	EN 10025 (DIN17100)	hot-rolled manufactures of construction steels part 1: general technical delivery specification
	EN 10028-1	flat manufactures of boiler steel plates part 1: general requirements
	EN 10028-3	flat manufactures of boiler steel plates part 3: weldable fine-grained steels, normalized
T-steel	EN 10055 (DIN1024)	hot-rolled equal-sided T-steel with rounded edges and passages - dimension, limit deviations and shape tolerances
angle	EN 10056-1 (DIN1028/DIN 1029)	equal-sided and unequal-sided angles of steel
UNP-profile	DIN 1026-1	hot-rolled U-profile steel - part 1: U-profile steel with raked flange surfaces - dimension, bulk and statically values
narrow I-beam	DIN 1025-1	hot-rolled I-beam - part 1: narrow I-beam, I-row - dimension, bulk and statically values
HEB/IPB beam normal row	DIN 1025-2	hot-rolled I-beam - part 2: I-beam, IPB-row; dimension, bulk and statically values
HEA/IPBL beam light row	DIN 1025-3	hot-rolled I-beam; wide I-beam, light execution, IPBL-row; dimension, bulk and statically values
HEM/IPBv reinforced row	DIN 1025-4	hot-rolled I-beam; wide I-beam, reinforced execution, IPBv-row; dimension, bulk and statically values
IPE beam medium I-beam	DIN 1025-5	hot-rolled I-beam; medium I-beam, IPE-row; dimension, bulk and statically values
round bright steel	EN10277-1 and 2	bright steel manufactures - technical delivery specification/bright steel manufactures - technical delivery specification - part 2: steels for general technical use

summary of norms

sheet metal	DIN EN 10131	cold-rolled flat manufactures without plating and with electrolytic zinc- or zinc-nickel-plating of soft steel as well as of steels with higher elastic limit for cold forming - limit deviations and shape tolerances
sheet metal	DIN EN 10029	warm-rolled sheet steel of 3 mm thickness limit deviations and shape tolerances
sheet metal	DIN EN ISO 18286	warm-rolled sheet metal of antirust steel limit deviations and shape tolerances
pipes	EN 10255	pipes of unalloyed steel with aptitude for welding and thread cutting technical delivery specification
pipes	EN 10217-7	technical delivery specification part 7: pipes of rust-resistant steels
pipes	EN 10240+A1 without DVGW	
screws	ISO 4017 (DIN933)	mechanical fasteners hexagon screws with thread till the head - product class A and B
screws	ISO 4014 (DIN931)	hexagon screws with socket - product class A and B
nuts	ISO 4032 (DIN934)	hexagon nuts, type 1 - product class A and B
washers	DIN 125-A/DIN 125-B	
hexagon nuts	DIN 6334	
threaded bar/ grub screws	DIN 976	threaded bolts - part 1: metric thread
turnbuckle	DIN 1480 turnbuckle with welding ends	turbuckle sleeve, forged (open shape)
zink-plated	DIN 50961 7 µ blue chromated	galvanic platings - zinc platings on iron materials terms, corrosion test and corrosion resistance
hot dip galvanized	EN ISO 1461	through hot dip galvanization upseted zinc coatings on steel (piece galvanizing) requirements and checks
inspection document	EN 10204 (3.1B-DIN50049)	kind of inspection documents

general terms of sales and deliveries

1. general information
These conditions shall apply to all our deliveries and services. All variations, additions and verbal agreements shall require our written confirmation in order to become legally valid. In the case of errors, mistakes in writing and calculation we shall reserve the right to make corrections and charge subsequently. Purchasing conditions of the buyer shall not be binding for us, even if we do ot expressly contradict them.

2. legal venue and place of performance
Wels. Austrian law exclusively shall apply to our contracts.

3. offers
Our offers, price lists and quotations are not binding. The buyer shall check our order confirmation immediately on receiving it. The order confirmation and any supplements shall be deemed confirmed in full, if the buyer does not give us any objection in written form within 8 days of date of issue. Descriptions of the delivery items and technical details are not binding.

4. prices
Prices, exclusive of packaging, shall apply as from Marchtrenk according to our current price list or according to the prices stated in the offer. In the case of changes in the material costs (e.g. alloy surcharges) as well as customs dues, taxes, etc. we shall reserve the right to adjust the costs to correspond with those at the time of delivery. In the case of an agreed free delivery we shall arrange the mode of transport and the transport route. The buyer shall ensure an adequate and reasonable means of implementation of the delivery.

5. conditions of payment
Our invoices, unless prepayment has been agreed upon, shall be paid within 14 days with 3% discount or in full within 30 days. Payments with debt-discharging effect may only be made directly to us. The buyer shall not have the right to withhold or charge against us payments due to guarantee claims or any other claims not recognized by us.

Delayed payment shall be charged according to the current bank rate, but not less than at an interest rate of 4% above the discount rate of the Austrian National Bank. All costs of reminders and collection shall be reimbursed. We may reject any offers of payment by cheque of bills of exchange without giving reasons.

Non-fulfilment of the conditions of payment or deterioration of the financial circumstances of the buyer shall entitle us to suspend the delivery and also that of further unsettled transactions until the buyer has fulfilled his obligations without any claims for damages arising out of this against us. In such a case we shall also be entitled to demand prepayment for outstanding deliveries, as well as after an appropriate extension to withdraw from the contract or demand compensation for non-fulfilment.

6. conditions of delivery/delivery dates/receiving of goods
The information about the time of delivery shall be according to our best judgement. The stated delivery time shall be cancelled in the event of force majeure, in which considerable difficulties for the company, for transportation and cessation of work in the factories of our raw material suppliers have occurred.
If an agreed delivery time has been exceeded by 6 weeks the buyer shall be entitled to set a new delivery deadline of 6 weeks. If this delivery deadline has not been met, the buyer shall be entitled to withdraw from the contract, provided he has given fair warning of this at the time of setting the new delivery deadline.
The right to withdraw shall not apply if the new delivery deadline cannot be met through no fault of ours. In such a case the buyer may withdraw from the contract after the original delivery date has been exceeded by 4 months. Complaints may only be accepted within 8 days of the goods being delivered.
Claims for damages due to a late delivery or non-fulfilment shall be ruled out, unless we are held responsible for criminal intent or gross negligence. Any risks shall rest in all cases with the buyer once the goods have left Marchtrenk.
Part services or part deliveries as well as part invoices shall be accepted and paid by the buyer. Part deliveries and part invoices shall be permissible and shall be paid by the buyer at the specified conditions. If the buyer does not accept the goods, we shall be entitled after setting a deadline of 14 days to withdraw from the contract and/or demand claims for non-fulfilment. We shall be entitled to demand either damages amounting to 30% of the agreed sum of the contract or compensation for the actual damage.

7. retention of title
The goods shall remain our property until full payment has been made. If before the end of our retention of title the delivered goods are to be processed by the buyer or assigned to be processed by a third party or combined or connected with other items, in so far as the retention of title no longer fully remains, then we shall acquire co-ownership in the new items in relation of the purchased goods to the processed items. In the event, before full payment, of goods being resold or new items being created from them, the buyer shall only be permitted to do this with our agreement. In the case of resale of the retention items the buyer shall assign all claims he has on his customer to us. If we so desire the buyer shall inform his customer of all claims we have on him and shall give us the necessary information, respectively shall hand out the documents. If the buyer is in default or breaches one of his duties resulting from the agreed retention, then total payment shall immediately due. In this case we shall be entitled to demand the return of our goods and to collect them from the buyer. The buyer shall waive any rights to assertion of claim.
All of our designs, plans and other documents are our property and shall not be used by the buyer or made available to a third party. Any designs or drawings given to us, including any that do not belong to the order, shall be available to the buyer. If these are not collected within

8. guarantee
Excluding any other guarantee claims, the buyer shall be obliged to check the delivered goods immediately on reception and shall notify us in writing in detailed form of any defects. Elimination of any defects shall not prolong the guarantee period. We shall not be obliged to undertake any improvements or any subsequent delivery as long as the buyer has not completely fulfilled his contractual obligations. We shall decide in which form to fulfil the guarantee claims, either by eliminating the defects or replacement with defect-free goods. There shall be no claims for price reduction. The guarantee shall expire in the event of modifications, improper use or processing of the goods without our permission.
We shall pay for the costs of any repairs, which the buyer undertakes, provided we have given our written permission. Regarding the suitability of the purchased goods we shall only provide guarantee that they be used according to our provisions and instructions. The buyer shall ensure that the contractual items will be used in accordance with the conditions and only in accordance with the instructions provided by us. Only attributes guaranteed by us expressly and in written form shall rank as guaranteed. Customary or technical discrepancies in measurement, fixtures and material or difference of colour and suchlike shall not entitle the buyer to a claim. All claims for damages towards us shall be excluded regardless of legal basis, regarding the conditions of the Product Liability Act for damage to persons, objects and financial loss which have occurred due to a defect in the goods, whereby above all claims for compensation for consequential damage, such as production failure or loss of profit and suchlike are completely excluded, unless we are held responsible for criminal intent or gross negligence.

9. cancellation
If orders are cancelled a cancellation fee of 10% of the contract sum shall be charged. The buyer shall only be entitled to a cancellation if we have expressively given written agreement. We shall reserve the right to take into account changes and supplements that the buyer wishes. Where necessary these shall be charged separately according to the actual cost of working time and material.

Changes, sentence and printing errors in the price list shall be reserved.
With this price list all previous ones are no longer valid.

ROHRBEFESTIGUNGEN
Hammerschmid GmbH

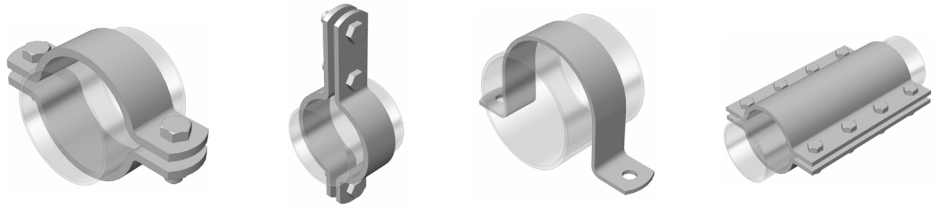

pipe clamps

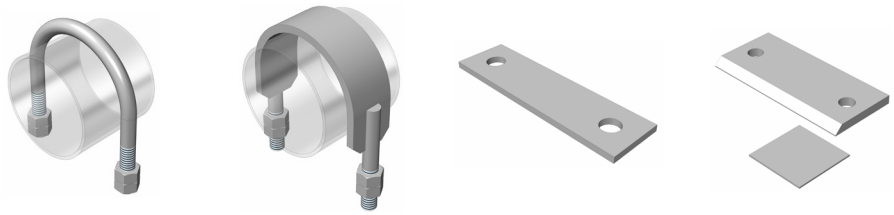

u-bolts
accessories

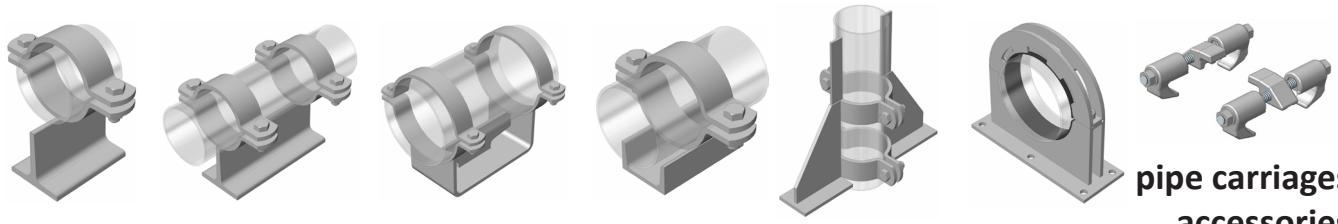

pipe carriages
accessories

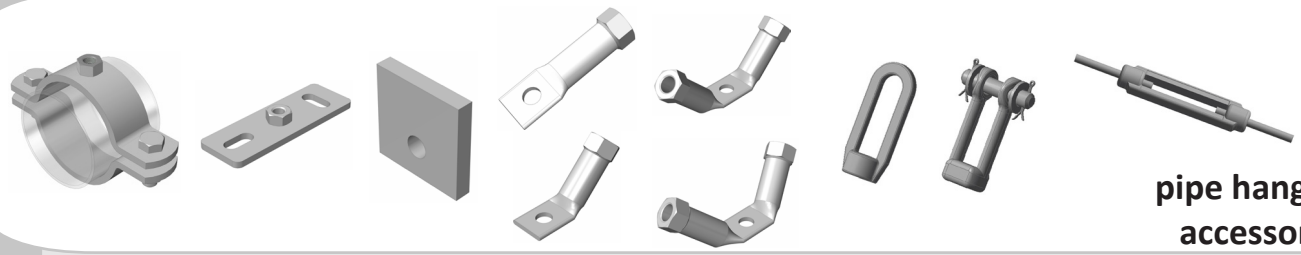

pipe hangers
accessories

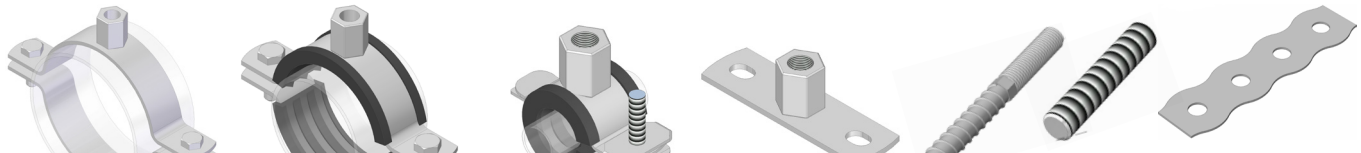

screw clamps
accessories

malleable iron pipe fittings
accessories

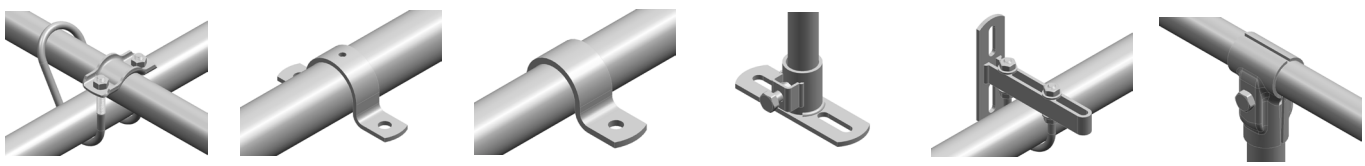

fasteners for agricultural factories

A-4614 Marchtrenk | Linzer Straße 141 | tel. 0043 7243 / 58 222 | fax 0043 7243 / 58 222 800 | e-mail: office@hammerschmid.at | www.hammerschmid.at

TÜV AUSTRIA
CE EN 1090-1:2009 zertifiziert
EDELSTAHL IS Rost frei

2015

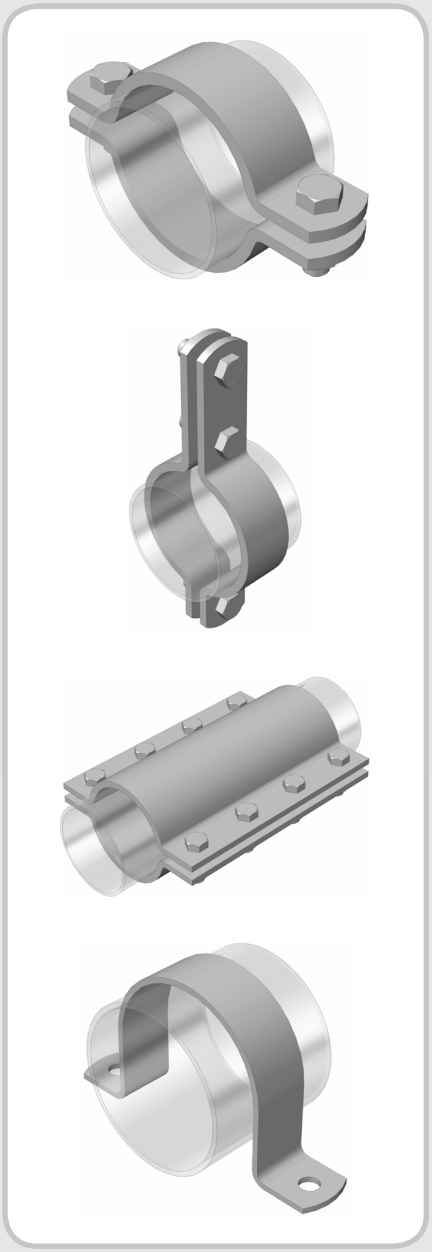

pipe clamps
DIN 3567-A (type SM)
DIN 3567-B (type SMH)
reinforced pipe clamp (type SV)
similar to DIN 3567-A (type SL)

wide pipe clamp
(type SB)

mounting clamp
(type BS)

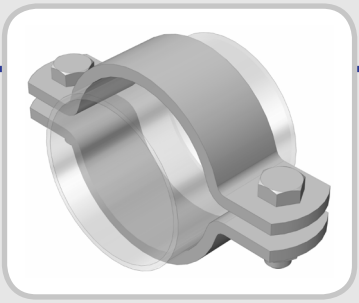

pipe clamps
DIN 3567-A (type SM)
reinforced pipe clamp (type SV)
DIN 3567-B (type SMH)
similar to DIN 3567-A (type SL)

wide pipe clamp
(type SB)

mounting clamp
(type BS)

For the order please provide the mandatory order data indicated in the technical drawings or the order number of the price sheets.

Pipe clamps are made of cold-deformed flat steels, embrace the pipe and are characterised by their versatile applications. We produce the clamps type SM and SL up to the nominal value 500 with rounded corners and including the respective pipe diameter. The pipe clamp may be used as a suspension clamp or as a support for the pipe support.

Wide pipe clamps are made of cold-deformed flat steel, embrace the pipe and are characterised by their versatile applications. The wide pipe clamps can be used for the construction of pipe supports.

Mounting clamps are made of cold-deformed flat steel and are used for the fastening on various substructures.

All clamps identified with * comply with standard DIN 3567-A/B, and those without the identifier comply with standard similar to DIN 3567-A/B.

attention: 1 piece = 1 pair

materials:

material	internal material specification	max. operation temperature	screw quality	nut quality
S235JR	01	300 °C	8.8	8
P265 GH (H2)	02	450 °C	Ck35	Ck35
16Mo3 (15Mo3)	03	530 °C	24CrMo5	Ck35
13CrMo4-5 (13CrMo44)	04	560 °C	21CrMoV57	21CrMoV57
1.4301 (A2)	05		A2	A2
1.4571 (A4)	06		A4	A4

extra surface protection:
Categorically any corrosion protection can be applied. We ask you to inform us regarding the coating system. These parts can be galvanized or hot dip galvanized. For hot dip galvanisation please contact us.

norms: see attachment 4.0 and 4.1

pipe clamp type SM

DN 15 - 1000

DIN 3567-A

All clamps identified with * comply with standard DIN 3567-A/B, and those without the identifier comply with standard similar to DIN 3567-A/B.

order example

type	material see 1.0.1	pipe diameter d1	extra	extra surface protection
SM	01	220	S+N	galv.

vertical

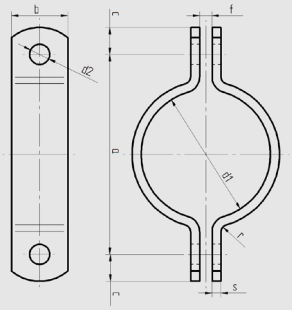

horizontal

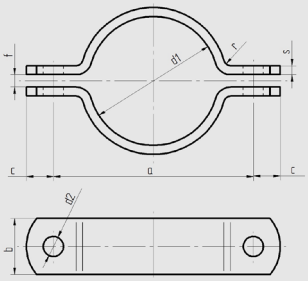

d1	nominal diameter	a	c	d2	f	r	flat steel bxs	screws used	weight kg/pair without S+N	weight kg/pair with S+N	vertical Fz (kN)	horizontal Fz (kN)
22	15	60	15	11,5	7	4	30x5	10x35	0,20	0,28	7,5	1,3
27*	20	66	15	11,5	7	4	30x5	10x35	0,22	0,30	6,4	1,3
34*	25	72	15	11,5	7	4	30x5	10x35	0,24	0,32	5,2	1,3
43*	32	82	15	11,5	7	4	30x5	10x35	0,28	0,36	4,1	1,3
49*	40	88	15	11,5	7	4	30x5	10x35	0,30	0,38	3,5	1,3
53	50	100	18	14	9	6	40x6	12x40	0,50	0,63	6,3	2,0
61*	50	108	18	14	9	6	40x6	12x40	0,58	0,71	5,3	2,0
68	65	115	18	14	9	6	40x6	12x40	0,63	0,76	4,7	2,0
77*	65	122	18	14	9	6	40x6	12x40	0,66	0,79	3,9	2,1
83	80	130	18	14	9	6	40x6	12x40	0,73	0,86	3,7	2,0
89*	80	136	18	14	9	6	40x6	12x40	0,75	0,88	3,3	2,0
104	100	162	24	18	11	6	50x8	16x50	1,38	1,67	6,2	3,7
108*	100	171	24	18	11	6	50x8	16x50	1,59	1,88	6,1	3,4
115*	100	178	24	18	11	6	50x8	16x50	1,63	1,92	5,6	3,4
129	125	188	24	18	11	6	50x8	16x50	1,70	1,99	4,8	3,6
133*	125	197	24	18	11	6	50x8	16x50	1,78	2,07	4,7	3,3
140*	125	204	24	18	11	6	50x8	16x50	1,83	2,12	4,4	3,3
154	150	214	24	18	11	6	50x8	16x50	1,96	2,25	3,9	3,6
159*	150	222	24	18	11	6	50x8	16x50	2,00	2,29	3,8	3,4
169*	150	232	24	18	11	6	50x8	16x50	2,08	2,37	3,5	3,4
191*	175	255	24	18	11	6	50x8	16x50	2,42	2,71	3,0	3,3
204	200	268	24	18	11	6	50x8	16x50	2,45	2,74	2,9	3,3
220*	200	284	24	18	11	6	50x8	16x50	2,64	2,93	2,6	3,3
254	250	336	30	23	14	8	60x8	20x60	3,75	4,28	2,9	3,1
273*	250	348	30	23	14	8	60x8	20x60	3,90	4,43	2,5	3,4
305	300	379	30	23	14	8	60x8	20x60	4,10	4,63	2,3	3,5
324*	300	398	30	23	14	8	60x8	20x60	4,48	5,01	2,1	3,5
356*	350	432	30	23	14	8	60x8	20x60	5,08	5,61	1,9	3,4
407*	400	498	36	27	18	10	70x10	24x70	8,52	9,47	3,0	5,1
457	450	550	36	27	18	10	70x10	24x70	8,60	9,55	2,6	5,0
508*	500	600	36	27	18	10	70x10	24x70	10,10	11,05	2,4	5,1
610	600	704	36	27	22	10	80x10	24x70	13,70	14,65	2,1	5,7
712	700	804	36	27	22	10	80x10	24x70	15,60	16,55	1,7	5,8
813	800	905	36	27	22	10	80x10	24x70	17,67	18,62	1,5	5,8
915	900	1007	36	27	28	10	90x10	24x75	22,50	23,45	1,4	6,5
1016	1000	1108	36	27	28	10	90x10	24x75	24,19	25,14	1,2	6,5

Actual measures of the pipe supports depend on the individual profile tolerance.
Basis for the calculation of the load values can be found on page 2.0, 2.1 and 2.2. Subject to technical modifications.

pipe clamp type SMH

DN 15 - 1000

DIN 3567-B

All clamps identified with * comply with standard DIN 3567-A/B, and those without the identifier comply with standard similar to DIN 3567-A/B.

vertical

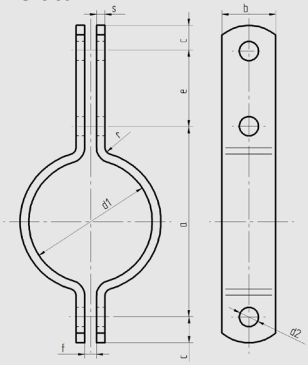

order example

type	material see 1.0.1	pipe diameter d1	extra	extra surface protection
SMH	01	220	S+N	galv.

d1	nominal diameter	a	e	c	d2	f	r	flat steel bxs	screws used	weight kg/pair without S+N	weight kg/pair with S+N	vertical Fz (kN)
22	15	60	46	15	11,5	7	4	30x5	10x35	0,31	0,43	7,5
27*	20	66	46	15	11,5	7	4	30x5	10x35	0,33	0,45	6,4
34*	25	72	46	15	11,5	7	4	30x5	10x35	0,35	0,47	5,2
43*	32	82	46	15	11,5	7	4	30x5	10x35	0,39	0,51	4,1
49*	40	88	46	15	11,5	7	4	30x5	10x35	0,41	0,53	3,5
53	50	100	54	18	14	9	6	40x6	12x40	0,70	0,90	6,3
61*	50	108	54	18	14	9	6	40x6	12x40	0,78	0,98	5,3
68	65	115	54	18	14	9	6	40x6	12x40	0,83	1,03	4,7
77*	65	122	54	18	14	9	6	40x6	12x40	0,86	1,06	3,9
83	80	130	54	18	14	9	6	40x6	12x40	0,93	1,13	3,7
89*	80	136	54	18	14	9	6	40x6	12x40	0,95	1,15	3,3
104	100	162	70	24	18	11	6	50x8	16x50	2,03	2,46	6,1
108*	100	171	70	24	18	11	6	50x8	16x50	2,03	2,46	6,1
115*	100	178	70	24	18	11	6	50x8	16x50	2,07	2,50	5,6
129	125	188	70	24	18	11	6	50x8	16x50	2,22	2,65	4,7
133*	125	197	70	24	18	11	6	50x8	16x50	2,22	2,65	4,7
140*	125	204	70	24	18	11	6	50x8	16x50	2,27	2,70	4,4
154	150	214	70	24	18	11	6	50x8	16x50	2,44	2,87	3,8
159*	150	222	70	24	18	11	6	50x8	16x50	2,44	2,87	3,8
169*	150	232	70	24	18	11	6	50x8	16x50	2,52	2,95	3,5
191*	175	255	70	24	18	11	6	50x8	16x50	2,86	3,29	3,0
204	200	268	70	24	18	11	6	50x8	16x50	2,89	3,32	2,9
220*	200	284	70	24	18	11	6	50x8	16x50	3,08	3,51	2,6
254	250	336	86	30	23	14	8	60x8	20x60	4,40	5,19	2,9
273*	250	348	86	30	23	14	8	60x8	20x60	4,55	5,34	2,5
305	300	379	86	30	23	14	8	60x8	20x60	4,75	5,54	2,3
324*	300	398	86	30	23	14	8	60x8	20x60	5,13	5,92	2,1
356*	350	432	86	30	23	14	8	60x8	20x60	5,73	6,52	1,9
407*	400	498	104	36	27	18	8	70x10	24x70	9,66	11,09	3,0
457	450	550	104	36	27	18	8	70x10	24x70	9,74	11,17	2,6
508*	500	600	104	36	27	18	8	70x10	24x70	11,24	12,67	2,4
610	600	704	104	36	27	22	10	80x10	24x70	14,84	16,27	2,1
712	700	804	104	36	27	22	10	80x10	24x70	16,74	18,17	1,7
813	800	905	104	36	27	22	10	80x10	24x70	18,81	20,24	1,5
915	900	1007	104	36	27	28	10	90x10	24x75	23,64	25,07	1,4
1016	1000	1108	104	36	27	28	10	90x10	24x75	25,33	26,76	1,2

Actual measures of the pipe supports depend on the individual profile tolerance.
Basis for the calculation of the load values can be found on page 2.0, 2.1 and 2.2. Subject to technical modifications.

A-4614 Marchtrenk | Linzer Straße 141 | tel. 0043 7243 / 58 222 | fax 0043 7243 / 58 222 800 | e-mail: office@hammerschmid.at | www.hammerschmid.at

reinforced pipe clamp type SV

DN 15 - 1100

horizontal

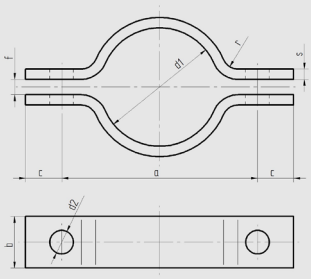

order example

type	material see 1.0.1	pipe diameter d1	extra	extra surface protection
SV	01	220	S+N	

d1	nominal diameter	a	c	d2	f	r	flat steel bxs	screws used	weight kg/pair without S+N	weight kg/pair with S+N
22	15	62	18	14	7	5	30x5	12x40	0,24	0,37
27	20	68	18	14	7	5	30x5	12x40	0,26	0,39
34	25	74	18	14	7	5	30x5	12x40	0,28	0,41
43	32	82	18	14	7	5	30x5	12x40	0,31	0,44
49	40	90	18	14	7	5	30x5	12x40	0,34	0,47
61	50	120	25	18	12	12	40x8	16x60	0,92	1,23
77	65	140	25	18	12	12	40x8	16x60	1,08	1,39
89	80	150	25	18	12	12	40x8	16x60	1,13	1,44
115	100	190	35	23	15	15	50x10	20x60	2,34	2,87
140	125	220	35	23	15	15	60x10	20x60	3,24	3,77
169	150	250	35	23	15	15	70x10	20x60	4,24	4,76
220	200	320	40	27	20	22	70x15	24x80	7,87	8,75
273	250	380	40	27	20	22	90x15	24x80	12,08	12,96
324	300	430	40	27	20	22	90x15	24x80	13,67	14,55
356	350	470	40	27	20	22	100x15	24x80	16,48	17,36
407	400	550	50	33	25	30	130x20	30x100	33,16	35,02
457	450	600	50	33	25	30	140x20	30x100	38,05	39,91
508	500	660	50	33	25	30	150x20	30x100	46,82	48,68
610	600	760	50	33	25	30	150x20	30x100	54,21	56,08
712	700	860	50	33	25	30	150x20	30x100	61,61	63,47
762	750	910	50	33	25	30	150x20	30x100	65,28	67,15
813	800	960	50	33	25	30	150x20	30x100	68,95	70,82
915	900	1060	50	33	25	30	150x20	30x100	76,40	78,26
1016	1000	1160	50	33	25	30	150x20	30x100	83,79	85,66
1120	1100	1270	50	33	25	30	150x20	30x100	91,75	93,62

Actual measures of the pipe supports depend on the individual profile tolerance.
Basis for the calculation of the load values can be found on page 2.0, 2.1 and 2.2. Subject to technical modifications.

A-4614 Marchtrenk | Linzer Straße 141 | tel. 0043 7243 / 58 222 | fax 0043 7243 / 58 222 800 | e-mail: office@hammerschmid.at | www.hammerschmid.at

pipe clamp type SL

DN 15 - 500

similar to DIN 3567-A

vertical

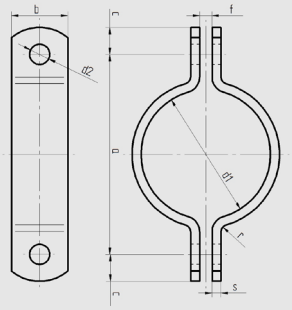

horizontal

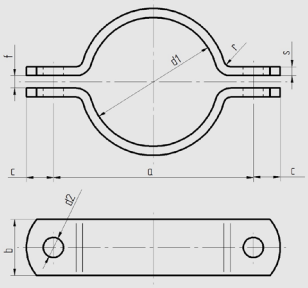

order example

type	material see 1.0.1	pipe diameter d1	extra	extra surface protection
SL	05	220	S+N	

d1	nominal diameter	a	c	d2	f	r	flat steel bxs	screws used	weight kg/pair without S+N	weight kg/pair with S+N	vertical Fz (kN)	horizontal Fz (kN)
22	15	51	15	11,5	7	4	30x4	10x35	0,14	0,22	5,7	1,1
27	20	57	15	11,5	7	4	30x4	10x35	0,16	0,24	4,9	1,1
34	25	64	15	11,5	7	4	30x4	10x35	0,18	0,26	4,2	1,1
43	32	73	15	11,5	7	4	30x4	10x35	0,21	0,29	3,4	1,1
49	40	79	15	11,5	7	4	30x4	10x35	0,23	0,31	2,9	1,1
53	50	83	15	11,5	7	4	30x4	10x35	0,23	0,33	2,8	1,1
61	50	91	15	11,5	7	4	30x4	10x35	0,25	0,33	2,4	1,1
68	65	98	15	11,5	7	4	30x4	10x35	0,30	0,38	2,0	1,1
77	65	107	15	11,5	7	4	30x4	10x35	0,32	0,40	1,7	1,1
83	80	113	15	11,5	7	4	30x4	10x35	0,33	0,41	1,7	1,1
89	80	119	15	11,5	7	4	30x4	10x35	0,36	0,44	1,5	1,1
104	100	150	18	14	9	6	40x5	12x40	0,68	0,81	2,8	1,4
108	100	154	18	14	9	6	40x5	12x40	0,72	0,85	2,6	1,4
115	100	161	18	14	9	6	40x5	12x40	0,73	0,86	2,4	1,4
129	125	175	18	14	9	6	40x5	12x40	0,80	0,93	2,2	1,4
133	125	179	18	14	9	6	40x5	12x40	0,81	0,94	2,1	1,4
140	125	186	18	14	9	6	40x5	12x40	0,88	1,01	2,0	1,4
154	150	200	18	14	9	6	40x5	12x40	0,90	1,03	1,9	1,4
159	150	205	18	14	9	6	40x5	12x40	0,93	1,06	1,8	1,4
169	150	215	18	14	9	6	40x5	12x40	1,02	1,15	1,6	1,4
191	175	237	18	14	9	6	40x5	12x40	1,08	1,21	1,5	1,4
204	200	250	18	14	9	6	40x5	12x40	1,15	1,28	1,5	1,4
220	200	266	18	14	9	6	40x5	12x40	1,24	1,37	1,4	1,4
229	200	275	18	14	9	6	40x5	12x40	1,26	1,39	1,4	1,4
254	250	320	24	18	11	6	50x5	16x50	1,95	2,24	1,8	1,3
273	250	339	24	18	11	6	50x5	16x50	2,02	2,31	1,6	1,3
305	300	371	24	18	11	6	50x5	16x50	2,25	2,54	1,5	1,3
324	300	390	24	18	11	6	50x5	16x50	2,35	2,64	1,4	1,3
356	350	422	24	18	11	6	50x5	16x50	2,65	2,94	1,4	1,3
407	400	472	24	18	11	6	50x5	16x50	3,05	3,99	1,2	1,3
508	500	573	24	18	11	6	50x5	16x50	3,54	4,48	1,0	1,3

Actual measures of the pipe supports depend on the individual profile tolerance.
Basis for the calculation of the load values can be found on page 2.0, 2.1 and 2.2. Subject to technical modifications.

wide pipe clamp type SB

DN 15 - 500

vertical

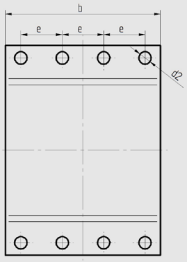

horizontal

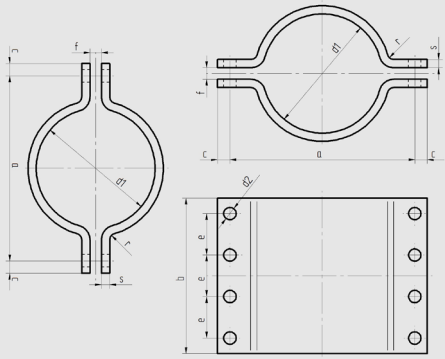

order example

type	material see 1.0.1	pipe diameter d1	extra	extra surface protection
SB	01	220	S+N	galv.

d1	nominal diameter	a	e	c	d2	f	r	flat steel bxs	screws used	weight kg/pair without S+N	weight kg/pair with S+N	vertical Fz (kN)	horizontal Fz (kN)
22	15	60	83	15	11,5	7	4	300x5	10x35	2,02	2,34	30,0	10,5
27	20	66	83	15	11,5	7	4	300x5	10x35	2,40	2,73	30,0	10,3
34	25	72	83	15	11,5	7	4	300x5	10x35	2,57	2,90	30,0	10,5
43	32	82	83	15	11,5	7	4	300x5	10x35	2,98	3,30	30,0	10,3
49	40	88	83	15	11,5	7	4	300x5	10x35	3,12	3,45	30,0	10,3
53	50	100	83	18	14	9	6	300x6	12x40	4,20	4,71	30,6	12,3
61	50	108	83	18	14	9	6	300x6	12x40	4,48	4,99	25,6	12,3
68	65	115	83	18	14	9	6	300x6	12x40	4,76	5,27	22,2	12,3
77	65	122	83	18	14	9	6	300x6	12x40	5,12	5,64	18,6	12,8
83	80	130	83	18	14	9	6	300x6	12x40	5,46	5,97	17,1	12,3
89	80	136	83	18	14	9	6	300x6	12x40	5,68	6,20	15,6	12,3
104	100	162	80	24	18	11	6	300x8	16x50	8,82	9,96	24,1	17,7
108	100	171	80	24	18	11	6	300x8	16x50	9,14	10,29	23,5	16,3
115	100	178	80	24	18	11	6	300x8	16x50	9,54	10,68	21,7	16,3
129	125	188	80	24	18	11	6	300x8	16x50	10,12	11,26	18,3	17,4
133	125	197	80	24	18	11	6	300x8	16x50	10,44	11,58	18,0	16,0
140	125	204	80	24	18	11	6	300x8	16x50	10,98	12,12	16,8	16,0
154	150	214	80	24	18	11	6	300x8	16x50	11,70	12,84	14,6	17,1
159	150	222	80	24	18	11	6	300x8	16x50	11,99	13,13	14,2	16,3
169	150	238	80	24	18	11	6	300x8	16x50	12,60	13,74	13,5	14,8
191	175	261	80	24	18	11	6	300x8	16x50	13,68	14,82	11,6	14,6
204	200	274	80	24	18	11	6	300x8	16x50	14,58	15,72	10,6	14,6
220	200	290	80	24	18	11	6	300x8	16x50	15,48	16,62	9,7	14,6
254	250	342	75	30	23	14	8	300x8	20x60	17,93	20,04	8,6	11,6
273	250	354	75	30	23	14	8	300x8	20x60	19,19	21,30	7,7	12,6
305	300	379	75	30	23	14	8	300x8	20x60	20,88	22,99	6,6	13,8
324	300	398	75	30	23	14	8	300x8	20x60	22,00	23,86	6,1	13,8
356	350	432	75	30	23	14	8	300x8	20x60	23,83	23,83	5,5	13,5
407	400	498	75	36	27	18	10	300x10	24x70	35,80	39,60	7,6	17,6
457	450	550	75	36	27	18	10	300x10	24x70	39,56	43,36	6,6	17,2
508	500	600	75	36	27	18	10	300x10	24x70	43,24	47,04	5,8	17,4

Actual measures of the pipe supports depend on the individual profile tolerance.
Basis for the calculation of the load values can be found on page 2.0, 2.1 and 2.2. Subject to technical modifications.

A-4614 Marchtrenk | Linzer Straße 141 | tel. 0043 7243 / 58 222 | fax 0043 7243 / 58 222 800 | e-mail: office@hammerschmid.at | www.hammerschmid.at

mounting clamp type BS

DN 15 - 500

upright

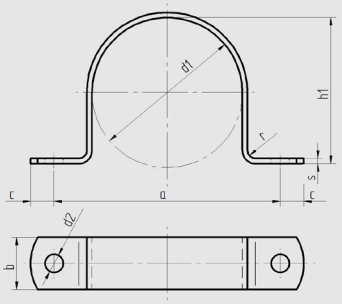

order example

type	material see 1.0.1	pipe diameter d1	extra	extra surface protection
BS	01	220		galv.

									upright		suspended		
d1	nominal diameter	a	c	h1	d2	r	flat steel bxs	weight kg/pc.	Fx (kN)	Fy (kN)	Fx (kN)	Fy (kN)	-Fz (kN)
22	15	60	15	20,5	12	4	30x3	0,08	1,0	1,0	0,3	0,3	-0,5
27	20	65	15	25,5	12	4	30x3	0,09	0,8	0,8	0,2	0,2	-0,5
34	25	72	15	32,5	12	4	30x3	0,10	0,7	0,7	0,2	0,2	-0,4
43	32	81	15	41,5	12	4	30x3	0,12	0,5	0,5	0,2	0,2	-0,4
49	40	87	15	47,5	12	4	30x3	0,13	0,5	0,5	0,2	0,2	-0,4
53	50	91	15	51,5	12	4	30x3	0,14	0,4	0,4	0,2	0,2	-0,4
61	50	99	15	59,5	12	4	30x3	0,15	0,4	0,4	0,2	0,2	-0,4
68	65	106	15	66,5	12	4	30x3	0,16	0,3	0,3	0,2	0,2	-0,3
77	65	115	15	75,5	12	4	30x3	0,18	0,3	0,3	0,2	0,2	-0,3
83	80	121	15	81,5	12	4	30x3	0,19	0,3	0,3	0,2	0,2	-0,3
89	80	127	15	87,5	12	4	30x3	0,20	0,3	0,3	0,1	0,1	-0,3
104	100	162	18	101	14	6	40x4	0,43	0,5	0,5	0,3	0,3	-0,5
108	100	166	18	105	14	6	40x4	0,45	0,5	0,5	0,3	0,3	-0,5
115	100	173	18	112	14	6	40x4	0,47	0,5	0,5	0,2	0,2	-0,5
129	125	187	18	126	14	6	40x4	0,51	0,4	0,4	0,2	0,2	-0,5
133	125	191	18	130	14	6	40x4	0,53	0,4	0,4	0,2	0,2	-0,5
140	125	198	18	137	14	6	40x4	0,55	0,4	0,4	0,2	0,2	-0,4
154	150	212	18	151	14	6	40x4	0,60	0,4	0,4	0,2	0,2	-0,4
159	150	217	18	156	14	6	40x4	0,61	0,3	0,3	0,2	0,2	-0,4
169	150	227	18	166	14	6	40x4	0,65	0,3	0,3	0,2	0,2	-0,4
191	175	249	18	188	14	6	40x4	0,72	0,3	0,3	0,2	0,2	-0,4
204	200	262	18	201	14	6	40x4	0,76	0,3	0,3	0,2	0,2	-0,4
220	200	278	18	217	14	6	40x4	0,81	0,2	0,2	0,2	0,2	-0,3
254	250	308	24	251	18	8	50x5	1,45	0,4	0,4	0,3	0,3	-0,6
273	250	327	24	270	18	8	50x5	1,54	0,4	0,4	0,3	0,3	-0,6
305	300	359	24	302	18	8	50x5	1,70	0,3	0,3	0,3	0,3	-0,5
324	300	378	24	321	18	8	50x5	1,80	0,3	0,3	0,3	0,3	-0,5
356	350	410	24	353	18	8	50x5	1,96	0,3	0,3	0,2	0,2	-0,5
407	400	461	24	404	18	8	50x5	2,21	0,3	0,3	0,2	0,2	-0,4
457	450	511	24	454	18	8	50x5	2,47	0,2	0,2	0,2	0,2	-0,4
508	500	562	24	505	18	8	50x5	2,73	0,2	0,2	0,2	0,2	-0,3

Actual measures of the pipe supports depend on the individual profile tolerance.
Basis for the calculation of the load values can be found on page 2.0, 2.1 and 2.2. Subject to technical modifications.

REQUEST/ORDER FAX FOR special clamps

company: _____

name: _____

telephone: _____

fax: _____

Please fill in your requested measures.
We will get in touch with you as soon as possible.

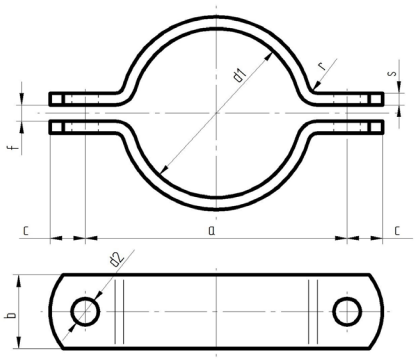

pipe clamp

material: .....

quantity: .....

b .....

s .....

c .....

a .....

f .....

r .....

d1 .....

d2 .....

_____
signature/stamp

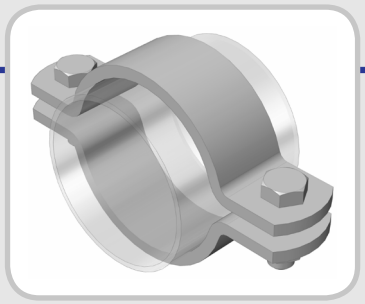

pipe clamp type SM DN 15 - 1000 DIN 3567-A

S235JR

product group discount: 1210

without S+N

item number	designation	price Euro	price per
10001	SM 01 22	98,00	100
10002	SM 01 27	98,00	100
10003	SM 01 34	98,00	100
10004	SM 01 43	116,00	100
10005	SM 01 49	116,00	100
10006	SM 01 53	216,00	100
10007	SM 01 61	216,00	100
10008	SM 01 68	232,00	100
10009	SM 01 77	232,00	100
10010	SM 01 83	232,00	100
10011	SM 01 89	248,00	100
11163	SM 01 104	480,00	100
10012	SM 01 108	480,00	100
10013	SM 01 115	494,00	100
11167	SM 01 129	512,00	100
10014	SM 01 133	512,00	100
10015	SM 01 140	528,00	100
11169	SM 01 154	546,00	100
10016	SM 01 159	546,00	100
10017	SM 01 169	562,00	100
10018	SM 01 191	562,00	100
10019	SM 01 204	610,00	100
10020	SM 01 220	628,00	100
10021	SM 01 254	1.024,00	100
10022	SM 01 273	1.056,00	100
10023	SM 01 305	1.106,00	100
10024	SM 01 324	1.138,00	100
10025	SM 01 356	1.188,00	100
10026	SM 01 407	2.146,00	100
10027	SM 01 457	2.278,00	100
10028	SM 01 508	2.392,00	100
10029	SM 01 610	7.560,00	100
10030	SM 01 712	7.906,00	100
10031	SM 01 813	8.302,00	100
10032	SM 01 915	9.128,00	100
10033	SM 01 1016	9.540,00	100

with S+N

item number	designation	price Euro	price per
10034	SM 01 22 S+N	132,00	100
10035	SM 01 27 S+N	132,00	100
10036	SM 01 34 S+N	132,00	100
10037	SM 01 43 S+N	148,00	100
10038	SM 01 49 S+N	148,00	100
10039	SM 01 53 S+N	264,00	100
10040	SM 01 61 S+N	264,00	100
10041	SM 01 68 S+N	280,00	100
10042	SM 01 77 S+N	280,00	100
10043	SM 01 83 S+N	280,00	100
10044	SM 01 89 S+N	298,00	100
11164	SM 01 104 S+N	578,00	100
10045	SM 01 108 S+N	578,00	100
10046	SM 01 115 S+N	594,00	100
11168	SM 01 129 S+N	610,00	100
10047	SM 01 133 S+N	610,00	100
10048	SM 01 140 S+N	644,00	100
11170	SM 01 154 S+N	662,00	100
10049	SM 01 159 S+N	662,00	100
10050	SM 01 169 S+N	676,00	100
10051	SM 01 191 S+N	676,00	100
10052	SM 01 204 S+N	710,00	100
10053	SM 01 220 S+N	726,00	100
10054	SM 01 254 S+N	1.220,00	100
10055	SM 01 273 S+N	1.254,00	100
10056	SM 01 305 S+N	1.320,00	100
10057	SM 01 324 S+N	1.354,00	100
10058	SM 01 356 S+N	1.402,00	100
10059	SM 01 407 S+N	2.558,00	100
10060	SM 01 457 S+N	2.690,00	100
10061	SM 01 508 S+N	2.806,00	100
10062	SM 01 610 S+N	7.972,00	100
10063	SM 01 712 S+N	8.320,00	100
10064	SM 01 813 S+N	8.714,00	100
10065	SM 01 915 S+N	9.540,00	100
10066	SM 01 1016 S+N	9.938,00	100

A-4614 Marchtrenk | Linzer Straße 141 | tel. 0043 7243 / 58 222 | fax 0043 7243 / 58 222 800 | e-mail: office@hammerschmid.at | www.hammerschmid.at

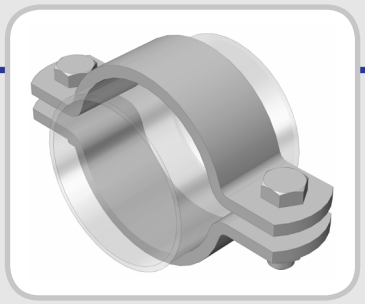

pipe clamp type SM DN 15 - 1000 DIN 3567-A

S235JR galvanized

product group discount: 1220

without S+N

item number	designation	price Euro	price per
10067	SM 01 22 galv.	116,00	100
10068	SM 01 27 galv.	132,00	100
10069	SM 01 34 galv.	148,00	100
10070	SM 01 43 galv.	148,00	100
10071	SM 01 49 galv.	164,00	100
10072	SM 01 53 galv.	312,00	100
10073	SM 01 61 galv.	312,00	100
10074	SM 01 68 galv.	346,00	100
10075	SM 01 77 galv.	346,00	100
10076	SM 01 83 galv.	364,00	100
10077	SM 01 89 galv.	364,00	100
11165	SM 01 104 galv.	742,00	100
10078	SM 01 108 galv.	742,00	100
10079	SM 01 115 galv.	758,00	100
11171	SM 01 129 galv.	810,00	100
10080	SM 01 133 galv.	810,00	100
10081	SM 01 140 galv.	826,00	100
11173	SM 01 154 galv.	890,00	100
10082	SM 01 159 galv.	890,00	100
10083	SM 01 169 galv.	924,00	100
10084	SM 01 191 galv.	974,00	100
10085	SM 01 204 galv.	1.024,00	100
10086	SM 01 220 galv.	1.072,00	100
10087	SM 01 254 galv.	1.636,00	100
10088	SM 01 273 galv.	1.700,00	100
10089	SM 01 305 galv.	1.816,00	100
10090	SM 01 324 galv.	1.898,00	100
10091	SM 01 356 galv.	1.998,00	100
10092	SM 01 407 galv.	3.516,00	100
10093	SM 01 457 galv.	3.780,00	100
10094	SM 01 508 galv.	4.044,00	100
10095	SM 01 610 galv.	9.788,00	100
10096	SM 01 712 galv.	10.448,00	100
10097	SM 01 813 galv.	11.174,00	100
10098	SM 01 915 galv.	12.726,00	100
10099	SM 01 1016 galv.	13.468,00	100

with S+N

item number	designation	price Euro	price per
10100	SM 01 22 S+N, galv.	164,00	100
10101	SM 01 27 S+N, galv.	182,00	100
10102	SM 01 34 S+N, galv.	200,00	100
10103	SM 01 43 S+N, galv.	200,00	100
10104	SM 01 49 S+N, galv.	216,00	100
10105	SM 01 53 S+N, galv.	378,00	100
10106	SM 01 61 S+N, galv.	380,00	100
10107	SM 01 68 S+N, galv.	396,00	100
10108	SM 01 77 S+N, galv.	396,00	100
10109	SM 01 83 S+N, galv.	446,00	100
10110	SM 01 89 S+N, galv.	446,00	100
11166	SM 01 104 S+N, galv.	858,00	100
10111	SM 01 108 S+N, galv.	858,00	100
10112	SM 01 115 S+N, galv.	890,00	100
11172	SM 01 129 S+N, galv.	924,00	100
10113	SM 01 133 S+N, galv.	924,00	100
10114	SM 01 140 S+N, galv.	956,00	100
11174	SM 01 154 S+N, galv.	1.008,00	100
10115	SM 01 159 S+N, galv.	1.008,00	100
10116	SM 01 169 S+N, galv.	1.040,00	100
10117	SM 01 191 S+N, galv.	1.106,00	100
10118	SM 01 204 S+N, galv.	1.138,00	100
10119	SM 01 220 S+N, galv.	1.188,00	100
10120	SM 01 254 S+N, galv.	1.882,00	100
10121	SM 01 273 S+N, galv.	1.964,00	100
10122	SM 01 305 S+N, galv.	2.064,00	100
10123	SM 01 324 S+N, galv.	2.146,00	100
10124	SM 01 356 S+N, galv.	2.262,00	100
10125	SM 01 407 S+N, galv.	3.994,00	100
10126	SM 01 457 S+N, galv.	4.258,00	100
10127	SM 01 508 S+N, galv.	4.522,00	100
10128	SM 01 610 S+N, galv.	10.266,00	100
10129	SM 01 712 S+N, galv.	10.944,00	100
10130	SM 01 813 S+N, galv.	11.668,00	100
10131	SM 01 915 S+N, galv.	13.204,00	100
10132	SM 01 1016 S+N, galv.	13.962,00	100

A-4614 Marchtrenk | Linzer Straße 141 | tel. 0043 7243 / 58 222 | fax 0043 7243 / 58 222 800 | e-mail: office@hammerschmid.at | www.hammerschmid.at

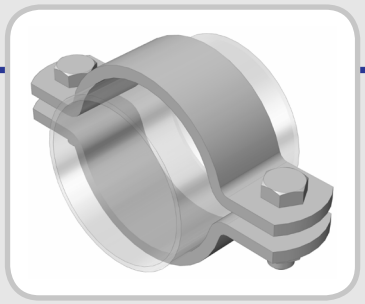

pipe clamp type SM DN 15 - 1000 DIN 3567-A

S235JR hot dip galvanized

product group discount: 1300

without S+N

item number	designation	price Euro	price per
10911	SM 01 22 hdg	116,00	100
10912	SM 01 27 hdg	132,00	100
10913	SM 01 34 hdg	148,00	100
10914	SM 01 43 hdg	148,00	100
10915	SM 01 49 hdg	164,00	100
10916	SM 01 53 hdg	312,00	100
10917	SM 01 61 hdg	312,00	100
10918	SM 01 68 hdg	346,00	100
10919	SM 01 77 hdg	346,00	100
10920	SM 01 83 hdg	364,00	100
10921	SM 01 89 hdg	364,00	100
11868	SM 01 104 hdg	742,00	100
10922	SM 01 108 hdg	742,00	100
10923	SM 01 115 hdg	758,00	100
11870	SM 01 129 hdg	810,00	100
10924	SM 01 133 hdg	810,00	100
10925	SM 01 140 hdg	826,00	100
11872	SM 01 154 hdg	890,00	100
10926	SM 01 159 hdg	890,00	100
10927	SM 01 169 hdg	924,00	100
10928	SM 01 191 hdg	974,00	100
10929	SM 01 204 hdg	1.024,00	100
10930	SM 01 220 hdg	1.072,00	100
10931	SM 01 254 hdg	1.636,00	100
10932	SM 01 273 hdg	1.700,00	100
10933	SM 01 305 hdg	1.816,00	100
10934	SM 01 324 hdg	1.898,00	100
10935	SM 01 356 hdg	1.998,00	100
10936	SM 01 407 hdg	3.516,00	100
10937	SM 01 457 hdg	3.780,00	100
10938	SM 01 508 hdg	4.044,00	100
10939	SM 01 610 hdg	9.788,00	100
10940	SM 01 712 hdg	10.448,00	100
10941	SM 01 813 hdg	11.174,00	100
10942	SM 01 915 hdg	12.726,00	100
10943	SM 01 1016 hdg	13.468,00	100

with S+N

item number	designation	price Euro	price per
10944	SM 01 22 S+N, hdg	164,00	100
10945	SM 01 27 S+N, hdg	182,00	100
10946	SM 01 34 S+N, hdg	200,00	100
10947	SM 01 43 S+N, hdg	200,00	100
10948	SM 01 49 S+N, hdg	216,00	100
10949	SM 01 53 S+N, hdg	378,00	100
10950	SM 01 61 S+N, hdg	380,00	100
10951	SM 01 68 S+N, hdg	396,00	100
10952	SM 01 77 S+N, hdg	396,00	100
10953	SM 01 83 S+N, hdg	446,00	100
10954	SM 01 89 S+N, hdg	446,00	100
11869	SM 01 104 S+N, hdg	858,00	100
10955	SM 01 108 S+N, hdg	858,00	100
10956	SM 01 115 S+N, hdg	890,00	100
11871	SM 01 129 S+N, hdg	924,00	100
10957	SM 01 133 S+N, hdg	924,00	100
10958	SM 01 140 S+N, hdg	956,00	100
11873	SM 01 154 S+N, hdg	1.008,00	100
10959	SM 01 159 S+N, hdg	1.008,00	100
10960	SM 01 169 S+N, hdg	1.040,00	100
10961	SM 01 191 S+N, hdg	1.106,00	100
10962	SM 01 204 S+N, hdg	1.138,00	100
10963	SM 01 220 S+N, hdg	1.188,00	100
10964	SM 01 254 S+N, hdg	1.882,00	100
10965	SM 01 273 S+N, hdg	1.964,00	100
10966	SM 01 305 S+N, hdg	2.064,00	100
10967	SM 01 324 S+N, hdg	2.146,00	100
10968	SM 01 356 S+N, hdg	2.262,00	100
10969	SM 01 407 S+N, hdg	3.994,00	100
10970	SM 01 457 S+N, hdg	4.258,00	100
10971	SM 01 508 S+N, hdg	4.522,00	100
10972	SM 01 610 S+N, hdg	10.266,00	100
10973	SM 01 712 S+N, hdg	10.944,00	100
10974	SM 01 813 S+N, hdg	11.668,00	100
10975	SM 01 915 S+N, hdg	13.204,00	100
10976	SM 01 1016 S+N, hdg	13.962,00	100

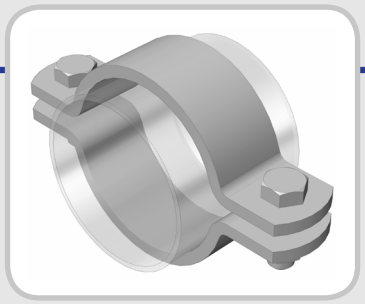

pipe clamp type SM DN 15 - 1000 DIN 3567-A

1.4301 All prices without alloy surcharge.

product group discount: 1250

without S+N

item number	designation	price Euro	price per
10157	SM 05 22	418,00	100
10452	SM 05 27	482,00	100
10453	SM 05 34	498,00	100
10454	SM 05 43	546,00	100
10455	SM 05 49	578,00	100
10456	SM 05 53	880,00	100
10457	SM 05 61	912,00	100
10458	SM 05 68	994,00	100
10459	SM 05 77	1.026,00	100
10460	SM 05 83	1.090,00	100
10461	SM 05 89	1.122,00	100
10828	SM 05 104	2.966,00	100
10462	SM 05 108	2.966,00	100
10463	SM 05 115	3.060,00	100
10830	SM 05 129	3.236,00	100
10464	SM 05 133	3.236,00	100
10465	SM 05 140	3.364,00	100
10832	SM 05 154	3.572,00	100
10466	SM 05 159	3.572,00	100
10467	SM 05 169	3.710,00	100
10468	SM 05 191	3.938,00	100
10469	SM 05 204	4.120,00	100
10470	SM 05 220	4.700,00	100
10471	SM 05 254	6.136,00	100
10472	SM 05 273	6.426,00	100
10473	SM 05 305	6.898,00	100
10474	SM 05 324	7.188,00	100
10475	SM 05 356	7.662,00	100
10476	SM 05 407	12.348,00	100
10477	SM 05 457	13.430,00	100
10478	SM 05 508	14.514,00	100
10479	SM 05 610	23.200,00	100
10480	SM 05 712	25.600,00	100
10481	SM 05 813	28.000,00	100
10482	SM 05 915	30.600,00	100
10483	SM 05 1016	33.105,00	100

with S+N

item number	designation	price Euro	price per
10484	SM 05 22 S+N	464,00	100
10485	SM 05 27 S+N	592,00	100
10486	SM 05 34 S+N	608,00	100
10487	SM 05 43 S+N	672,00	100
10488	SM 05 49 S+N	688,00	100
10489	SM 05 53 S+N	1.058,00	100
10490	SM 05 61 S+N	1.090,00	100
10491	SM 05 68 S+N	1.168,00	100
10492	SM 05 77 S+N	1.200,00	100
10493	SM 05 83 S+N	1.264,00	100
10494	SM 05 89 S+N	1.298,00	100
10829	SM 05 104 S+N	3.326,00	100
10495	SM 05 108 S+N	3.326,00	100
10496	SM 05 115 S+N	3.418,00	100
10831	SM 05 129 S+N	3.618,00	100
10497	SM 05 133 S+N	3.618,00	100
10498	SM 05 140 S+N	3.724,00	100
10833	SM 05 154 S+N	3.954,00	100
10499	SM 05 159 S+N	3.954,00	100
10500	SM 05 169 S+N	4.076,00	100
10501	SM 05 191 S+N	4.304,00	100
10502	SM 05 204 S+N	4.518,00	100
10503	SM 05 220 S+N	5.174,00	100
10504	SM 05 254 S+N	6.854,00	100
10505	SM 05 273 S+N	7.158,00	100
10506	SM 05 305 S+N	7.616,00	100
10507	SM 05 324 S+N	7.906,00	100
10508	SM 05 356 S+N	8.394,00	100
10509	SM 05 407 S+N	13.874,00	100
10510	SM 05 457 S+N	14.972,00	100
10511	SM 05 508 S+N	20.084,00	100
10512	SM 05 610 S+N	25.600,00	100
10513	SM 05 712 S+N	27.600,00	100
10514	SM 05 813 S+N	30.110,00	100
10515	SM 05 915 S+N	32.400,00	100
10516	SM 05 1016 S+N	34.500,00	100

A-4614 Marchtrenk | Linzer Straße 141 | tel. 0043 7243 / 58 222 | fax 0043 7243 / 58 222 800 | e-mail: office@hammerschmid.at | www.hammerschmid.at

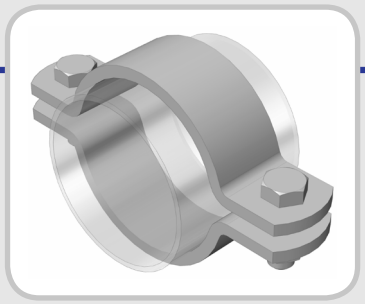

pipe clamp type SM DN 15 - 1000 DIN 3567-A

1.4571 All prices without alloy surcharge.

product group discount: 1260

without S+N

item number	designation	price Euro	price per
10573	SM 06 22	450,00	100
10574	SM 06 27	528,00	100
10575	SM 06 34	560,00	100
10576	SM 06 43	624,00	100
10577	SM 06 49	640,00	100
10578	SM 06 53	1.026,00	100
10579	SM 06 61	1.072,00	100
10580	SM 06 68	1.168,00	100
10581	SM 06 77	1.200,00	100
10582	SM 06 83	1.268,00	100
10583	SM 06 89	1.312,00	100
10834	SM 06 104	3.342,00	100
10584	SM 06 108	3.342,00	100
10585	SM 06 115	3.466,00	100
10836	SM 06 129	3.678,00	100
10586	SM 06 133	3.678,00	100
10587	SM 06 140	3.816,00	100
10838	SM 06 154	4.090,00	100
10588	SM 06 159	4.090,00	100
10589	SM 06 169	4.242,00	100
10590	SM 06 191	4.534,00	100
10591	SM 06 204	4.762,00	100
10592	SM 06 220	4.992,00	100
10593	SM 06 254	7.050,00	100
10594	SM 06 273	7.416,00	100
10595	SM 06 305	7.966,00	100
10596	SM 06 324	8.332,00	100
10597	SM 06 356	8.898,00	100
10598	SM 06 407	18.788,00	100
10599	SM 06 457	20.558,00	100
10600	SM 06 508	22.282,00	100
10601	SM 06 610	26.100,00	100
10602	SM 06 712	28.500,00	100
10603	SM 06 813	31.240,00	100
10604	SM 06 915	43.500,00	100
10605	SM 06 1016	47.100,00	100

with S+N

item number	designation	price Euro	price per
10606	SM 06 22 S+N	528,00	100
10607	SM 06 27 S+N	688,00	100
10608	SM 06 34 S+N	704,00	100
10609	SM 06 43 S+N	768,00	100
10610	SM 06 49 S+N	800,00	100
10611	SM 06 53 S+N	1.250,00	100
10612	SM 06 61 S+N	1.298,00	100
10613	SM 06 68 S+N	1.394,00	100
10614	SM 06 77 S+N	1.426,00	100
10615	SM 06 83 S+N	1.506,00	100
10616	SM 06 89 S+N	1.538,00	100
10835	SM 06 104 S+N	3.846,00	100
10617	SM 06 108 S+N	3.846,00	100
10618	SM 06 115 S+N	3.968,00	100
10837	SM 06 129 S+N	4.182,00	100
10619	SM 06 133 S+N	4.182,00	100
10620	SM 06 140 S+N	4.320,00	100
10839	SM 06 154 S+N	4.594,00	100
10621	SM 06 159 S+N	4.594,00	100
10622	SM 06 169 S+N	4.732,00	100
10623	SM 06 191 S+N	5.022,00	100
10624	SM 06 204 S+N	5.266,00	100
10625	SM 06 220 S+N	5.494,00	100
10626	SM 06 254 S+N	8.074,00	100
10627	SM 06 273 S+N	8.898,00	100
10628	SM 06 305 S+N	8.990,00	100
10629	SM 06 324 S+N	9.340,00	100
10630	SM 06 356 S+N	9.906,00	100
10631	SM 06 407 S+N	21.320,00	100
10632	SM 06 457 S+N	23.106,00	100
10633	SM 06 508 S+N	24.830,00	100
10634	SM 06 610 S+N	28.000,00	100
10635	SM 06 712 S+N	30.400,00	100
10636	SM 06 813 S+N	33.140,00	100
10637	SM 06 915 S+N	45.400,00	100
10638	SM 06 1016 S+N	49.000,00	100

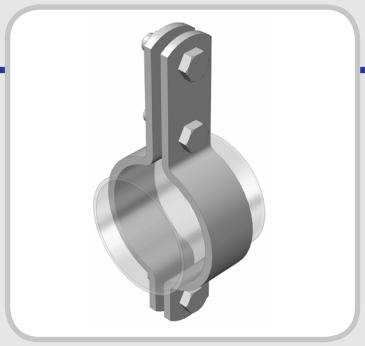

pipe clamp type SMH DN 15 - 1000 DIN 3567-B

S235JR

product group discount: 1700

without S+N

item number	designation	price Euro	price per
10696	SMH 01 22	608,72	100
10697	SMH 01 27	614,22	100
10698	SMH 01 34	616,63	100
10699	SMH 01 43	621,79	100
10700	SMH 01 49	624,54	100
10701	SMH 01 53	655,57	100
10702	SMH 01 61	665,01	100
10703	SMH 01 68	669,73	100
10704	SMH 01 77	675,86	100
10705	SMH 01 83	681,53	100
10706	SMH 01 89	685,30	100
11850	SMH 01 104	831,00	100
10707	SMH 01 108	831,00	100
10708	SMH 01 115	832,00	100
11862	SMH 01 129	852,00	100
10709	SMH 01 133	852,00	100
10710	SMH 01 140	864,00	100
11856	SMH 01 154	886,40	100
10711	SMH 01 159	886,40	100
10712	SMH 01 169	900,00	100
10713	SMH 01 191	924,00	100
10714	SMH 01 204	944,00	100
10715	SMH 01 220	964,00	100
10716	SMH 01 254	1.491,30	100
10717	SMH 01 273	1.521,50	100
10718	SMH 01 305	1.568,70	100
10719	SMH 01 324	1.597,97	100
10720	SMH 01 356	1.646,11	100
10721	SMH 01 407	3.856,83	100
10722	SMH 01 457	4.039,87	100
10723	SMH 01 508	4.218,34	100
10724	SMH 01 610	4.693,76	100
10725	SMH 01 712	4.930,53	100
10726	SMH 01 813	5.189,25	100
10727	SMH 01 915	11.214,72	100
10728	SMH 01 1016	12.025,60	100

with S+N

item number	designation	price Euro	price per
10729	SMH 01 22 S+N	798,00	100
10730	SMH 01 27 S+N	802,00	100
10731	SMH 01 34 S+N	804,00	100
10732	SMH 01 43 S+N	810,00	100
10733	SMH 01 49 S+N	812,00	100
10734	SMH 01 53 S+N	912,00	100
10735	SMH 01 61 S+N	926,00	100
10736	SMH 01 68 S+N	934,00	100
10737	SMH 01 77 S+N	944,00	100
10738	SMH 01 83 S+N	952,00	100
10739	SMH 01 89 S+N	958,00	100
11853	SMH 01 104 S+N	1.470,00	100
10740	SMH 01 108 S+N	1.470,00	100
10741	SMH 01 115 S+N	1.240,00	100
11865	SMH 01 129 S+N	1.272,00	100
10742	SMH 01 133 S+N	1.272,00	100
10743	SMH 01 140 S+N	1.290,00	100
11859	SMH 01 154 S+N	1.326,00	100
10744	SMH 01 159 S+N	1.326,00	100
10745	SMH 01 169 S+N	1.346,00	100
10746	SMH 01 191 S+N	1.384,00	100
10747	SMH 01 204 S+N	1.414,00	100
10748	SMH 01 220 S+N	1.446,00	100
10749	SMH 01 254 S+N	2.272,00	100
10750	SMH 01 273 S+N	2.320,00	100
10751	SMH 01 305 S+N	2.394,00	100
10752	SMH 01 324 S+N	2.442,00	100
10753	SMH 01 356 S+N	2.518,00	100
10754	SMH 01 407 S+N	4.590,00	100
10755	SMH 01 457 S+N	4.754,00	100
10756	SMH 01 508 S+N	4.914,00	100
10757	SMH 01 610 S+N	5.600,00	100
10758	SMH 01 712 S+N	5.820,00	100
10759	SMH 01 813 S+N	6.210,00	100
10760	SMH 01 915 S+N	11.800,00	100
10761	SMH 01 1016 S+N	12.620,00	100

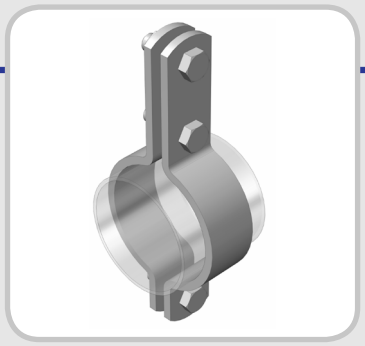

pipe clamp type SMH DN 15 - 1000 DIN 3567-B

S235JR galvanized

product group discount: 1710

without S+N

item number	designation	price Euro	price per
10762	SMH 01 22 galv.	816,00	100
10763	SMH 01 27 galv.	818,00	100
10764	SMH 01 34 galv.	834,00	100
10765	SMH 01 43 galv.	846,00	100
10766	SMH 01 49 galv.	852,00	100
10767	SMH 01 53 galv.	992,00	100
10768	SMH 01 61 galv.	1.012,00	100
10769	SMH 01 68 galv.	1.032,00	100
10770	SMH 01 77 galv.	1.050,00	100
10771	SMH 01 83 galv.	1.058,00	100
10772	SMH 01 89 galv.	1.070,00	100
11852	SMH 01 104 galv.	1.700,00	100
10773	SMH 01 108 galv.	1.700,00	100
10774	SMH 01 115 galv.	1.482,00	100
11864	SMH 01 129 galv.	1.538,00	100
10775	SMH 01 133 galv.	1.538,00	100
10776	SMH 01 140 galv.	1.574,00	100
11858	SMH 01 154 galv.	1.636,00	100
10777	SMH 01 159 galv.	1.636,00	100
10778	SMH 01 169 galv.	1.674,00	100
10779	SMH 01 191 galv.	1.742,00	100
10780	SMH 01 204 galv.	1.796,00	100
10781	SMH 01 220 galv.	1.854,00	100
10782	SMH 01 254 galv.	2.740,00	100
10783	SMH 01 273 galv.	2.822,00	100
10784	SMH 01 305 galv.	2.954,00	100
10785	SMH 01 324 galv.	3.036,00	100
10786	SMH 01 356 galv.	3.168,00	100
10787	SMH 01 407 galv.	5.722,00	100
10788	SMH 01 457 galv.	6.026,00	100
10789	SMH 01 508 galv.	6.324,00	100
10790	SMH 01 610 galv.	6.521,00	100
10791	SMH 01 712 galv.	6.804,00	100
10792	SMH 01 813 galv.	7.060,00	100
10793	SMH 01 915 galv.	14.235,00	100
10794	SMH 01 1016 galv.	15.035,00	100

with S+N

item number	designation	price Euro	price per
10795	SMH 01 22 S+N, galv.	852,00	100
10796	SMH 01 27 S+N, galv.	864,00	100
10797	SMH 01 34 S+N, galv.	870,00	100
10798	SMH 01 43 S+N, galv.	880,00	100
10799	SMH 01 49 S+N, galv.	886,00	100
10800	SMH 01 53 S+N, galv.	1.044,00	100
10801	SMH 01 61 S+N, galv.	1.062,00	100
10802	SMH 01 68 S+N, galv.	1.080,00	100
10803	SMH 01 77 S+N, galv.	1.094,00	100
10804	SMH 01 83 S+N, galv.	1.110,00	100
10805	SMH 01 89 S+N, galv.	1.120,00	100
11855	SMH 01 104 S+N, galv.	1.810,00	100
10806	SMH 01 108 S+N, galv.	1.810,00	100
10807	SMH 01 115 S+N, galv.	1.592,00	100
11867	SMH 01 129 S+N, galv.	1.648,00	100
10808	SMH 01 133 S+N, galv.	1.648,00	100
10809	SMH 01 140 S+N, galv.	1.682,00	100
11861	SMH 01 154 S+N, galv.	1.746,00	100
10810	SMH 01 159 S+N, galv.	1.746,00	100
10811	SMH 01 169 S+N, galv.	1.784,00	100
10812	SMH 01 191 S+N, galv.	1.852,00	100
10813	SMH 01 204 S+N, galv.	1.906,00	100
10814	SMH 01 220 S+N, galv.	1.964,00	100
10815	SMH 01 254 S+N, galv.	2.964,00	100
10816	SMH 01 273 S+N, galv.	3.048,00	100
10817	SMH 01 305 S+N, galv.	3.178,00	100
10818	SMH 01 324 S+N, galv.	3.260,00	100
10819	SMH 01 356 S+N, galv.	3.392,00	100
10820	SMH 01 407 S+N, galv.	6.168,00	100
10821	SMH 01 457 S+N, galv.	6.474,00	100
10822	SMH 01 508 S+N, galv.	6.612,00	100
10823	SMH 01 610 S+N, galv.	6.820,00	100
10824	SMH 01 712 S+N, galv.	7.015,00	100
10825	SMH 01 813 S+N, galv.	7.546,00	100
10826	SMH 01 915 S+N, galv.	13.052,00	100
10827	SMH 01 1016 S+N, galv.	15.020,00	100

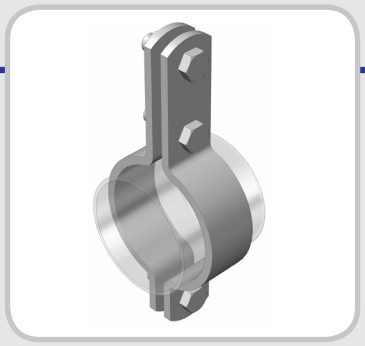

pipe clamp type SMH DN 15 - 1000 DIN 3567-B

S235JR hot dip galvanized

product group discount: 1720

without S+N

item number	designation	price Euro	price per
11560	SMH 01 22 hdg	1.236,00	100
11561	SMH 01 27 hdg	1.246,00	100
11562	SMH 01 34 hdg	1.253,00	100
11563	SMH 01 43 hdg	1.266,00	100
11564	SMH 01 49 hdg	1.273,00	100
11565	SMH 01 53 hdg	1.377,00	100
11566	SMH 01 61 hdg	1.404,00	100
11567	SMH 01 68 hdg	1.419,00	100
11568	SMH 01 77 hdg	1.433,00	100
11569	SMH 01 83 hdg	1.454,00	100
11570	SMH 01 89 hdg	1.462,00	100
11851	SMH 01 104 hdg	1.826,00	100
11571	SMH 01 108 hdg	1.826,00	100
11572	SMH 01 115 hdg	1.845,00	100
11863	SMH 01 129 hdg	1.898,00	100
11573	SMH 01 133 hdg	1.898,00	100
11574	SMH 01 140 hdg	1.923,00	100
11857	SMH 01 154 hdg	1.983,00	100
11575	SMH 01 159 hdg	1.983,00	100
11576	SMH 01 169 hdg	2.015,00	100
11577	SMH 01 191 hdg	2.106,00	100
11578	SMH 01 204 hdg	2.138,00	100
11579	SMH 01 220 hdg	2.198,00	100
11580	SMH 01 254 hdg	3.393,00	100
11581	SMH 01 273 hdg	3.460,00	100
11582	SMH 01 305 hdg	3.560,00	100
11583	SMH 01 324 hdg	3.666,00	100
11584	SMH 01 356 hdg	3.836,00	100
11585	SMH 01 407 hdg	7.052,00	100
11586	SMH 01 457 hdg	7.217,00	100
11587	SMH 01 508 hdg	7.624,00	100
11588	SMH 01 610 hdg	11.264,00	100
11589	SMH 01 712 hdg	11.981,00	100
11590	SMH 01 813 hdg	12.764,00	100
11591	SMH 01 915 hdg	15.945,00	100
11592	SMH 01 1016 hdg	16.712,00	100

with S+N

item number	designation	price Euro	price per
11593	SMH 01 22 S+N, hdg	1.342,00	100
11594	SMH 01 27 S+N, hdg	1.352,00	100
11595	SMH 01 34 S+N, hdg	1.338,00	100
11596	SMH 01 43 S+N, hdg	1.372,00	100
11597	SMH 01 49 S+N, hdg	1.379,00	100
11598	SMH 01 53 S+N, hdg	1.553,00	100
11599	SMH 01 61 S+N, hdg	1.580,00	100
11600	SMH 01 68 S+N, hdg	1.596,00	100
11601	SMH 01 77 S+N, hdg	1.610,00	100
11602	SMH 01 83 S+N, hdg	1.630,00	100
11603	SMH 01 89 S+N, hdg	1.639,00	100
11854	SMH 01 104 S+N, hdg	2.170,00	100
11604	SMH 01 108 S+N, hdg	2.170,00	100
11605	SMH 01 115 S+N, hdg	2.198,00	100
11866	SMH 01 129 S+N, hdg	2.251,00	100
11606	SMH 01 133 S+N, hdg	2.251,00	100
11607	SMH 01 140 S+N, hdg	2.276,00	100
11860	SMH 01 154 S+N, hdg	2.335,00	100
11608	SMH 01 159 S+N, hdg	2.335,00	100
11609	SMH 01 169 S+N, hdg	2.368,00	100
11610	SMH 01 191 S+N, hdg	2.459,00	100
11611	SMH 01 204 S+N, hdg	2.491,00	100
11612	SMH 01 220 S+N, hdg	2.551,00	100
11613	SMH 01 254 S+N, hdg	4.072,00	100
11614	SMH 01 273 S+N, hdg	4.140,00	100
11615	SMH 01 305 S+N, hdg	4.239,00	100
11616	SMH 01 324 S+N, hdg	4.345,00	100
11617	SMH 01 356 S+N, hdg	4.515,00	100
11618	SMH 01 407 S+N, hdg	8.329,00	100
11619	SMH 01 457 S+N, hdg	8.495,00	100
11620	SMH 01 508 S+N, hdg	8.901,00	100
11621	SMH 01 610 S+N, hdg	12.542,00	100
11622	SMH 01 712 S+N, hdg	13.258,00	100
11623	SMH 01 813 S+N, hdg	14.041,00	100
11624	SMH 01 915 S+N, hdg	17.223,00	100
11625	SMH 01 1016 S+N, hdg	17.989,00	100

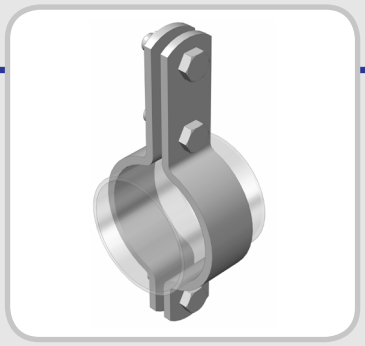

pipe clamp type SMH DN 15 - 1000 DIN 3567-B

1.4301 All prices without alloy surcharge.

product group discount: 1750

without S+N

item number	designation	price Euro	price per
11400	SMH 05 22	897,00	100
11401	SMH 05 27	930,00	100
11402	SMH 05 34	1.026,00	100
11403	SMH 05 43	1.095,00	100
11404	SMH 05 49	1.131,00	100
11405	SMH 05 53	1.542,00	100
11406	SMH 05 61	1.674,00	100
11407	SMH 05 68	1.755,00	100
11408	SMH 05 77	1.803,00	100
11409	SMH 05 83	1.920,00	100
11410	SMH 05 89	1.953,00	100
11411	SMH 05 104	3.162,00	100
11412	SMH 05 108	3.489,00	100
11413	SMH 05 115	3.552,00	100
11414	SMH 05 129	3.663,00	100
11415	SMH 05 133	3.786,00	100
11416	SMH 05 140	3.864,00	100
11417	SMH 05 154	4.068,00	100
11418	SMH 05 159	4.191,00	100
11419	SMH 05 169	4.314,00	100
11420	SMH 05 191	4.845,00	100
11421	SMH 05 204	4.893,00	100
11422	SMH 05 220	5.187,00	100
11423	SMH 05 254	8.412,00	100
11424	SMH 05 273	8.526,00	100
11425	SMH 05 305	9.861,00	100
11426	SMH 05 324	9.843,00	100
11427	SMH 05 356	10.287,00	100
11428	SMH 05 407	17.694,00	100
11429	SMH 05 457	18.162,00	100
11430	SMH 05 508	18.867,00	100
11431	SMH 05 610	25.353,00	100
11432	SMH 05 712	27.762,00	100
11433	SMH 05 813	30.085,00	100
11434	SMH 05 915	33.710,00	100
11435	SMH 05 1016	35.407,00	100

with S+N

item number	designation	price Euro	price per
11436	SMH 05 22 S+N	1.021,00	100
11437	SMH 05 27 S+N	1.054,00	100
11438	SMH 05 34 S+N	1.150,00	100
11439	SMH 05 43 S+N	1.219,00	100
11440	SMH 05 49 S+N	1.255,00	100
11441	SMH 05 53 S+N	1.733,00	100
11442	SMH 05 61 S+N	1.865,00	100
11443	SMH 05 68 S+N	1.946,00	100
11444	SMH 05 77 S+N	1.994,00	100
11445	SMH 05 83 S+N	2.111,00	100
11446	SMH 05 89 S+N	2.144,00	100
11447	SMH 05 104 S+N	3.591,00	100
11448	SMH 05 108 S+N	3.918,00	100
11449	SMH 05 115 S+N	3.981,00	100
11450	SMH 05 129 S+N	4.092,00	100
11451	SMH 05 133 S+N	4.215,00	100
11452	SMH 05 140 S+N	4.293,00	100
11453	SMH 05 154 S+N	4.497,00	100
11454	SMH 05 159 S+N	4.620,00	100
11455	SMH 05 169 S+N	4.734,00	100
11456	SMH 05 191 S+N	5.274,00	100
11457	SMH 05 204 S+N	5.322,00	100
11458	SMH 05 220 S+N	5.616,00	100
11459	SMH 05 254 S+N	9.301,00	100
11460	SMH 05 273 S+N	9.415,00	100
11461	SMH 05 305 S+N	10.450,00	100
11462	SMH 05 324 S+N	10.732,00	100
11463	SMH 05 356 S+N	11.176,00	100
11464	SMH 05 407 S+N	19.361,00	100
11465	SMH 05 457 S+N	19.829,00	100
11466	SMH 05 508 S+N	20.534,00	100
11467	SMH 05 610 S+N	27.020,00	100
11468	SMH 05 712 S+N	29.429,00	100
11469	SMH 05 813 S+N	31.753,00	100
11470	SMH 05 915 S+N	35.442,00	100
11471	SMH 05 1016 S+N	37.140,00	100

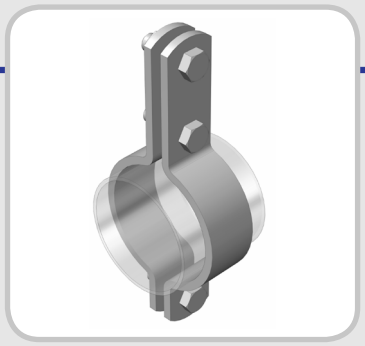

pipe clamp type SMH DN 15 - 1000 DIN 3567-B

1.4571 All prices without alloy surcharge.

product group discount: 1760

without S+N

item number	designation	price Euro	price per
11472	SMH 06 22	1.083,00	100
11473	SMH 06 27	1.131,00	100
11474	SMH 06 34	1.242,00	100
11475	SMH 06 43	1.344,00	100
11476	SMH 06 49	1.395,00	100
11477	SMH 06 53	2.082,00	100
11478	SMH 06 61	2.283,00	100
11479	SMH 06 68	2.409,00	100
11480	SMH 06 77	2.487,00	100
11481	SMH 06 83	2.664,00	100
11482	SMH 06 89	2.715,00	100
11483	SMH 06 104	4.299,00	100
11484	SMH 06 108	4.791,00	100
11485	SMH 06 115	4.884,00	100
11486	SMH 06 129	5.049,00	100
11487	SMH 06 133	5.235,00	100
11488	SMH 06 140	5.352,00	100
11489	SMH 06 154	5.655,00	100
11490	SMH 06 159	5.841,00	100
11491	SMH 06 169	6.027,00	100
11492	SMH 06 191	6.822,00	100
11493	SMH 06 204	6.894,00	100
11494	SMH 06 220	7.338,00	100
11495	SMH 06 254	12.357,00	100
11496	SMH 06 273	12.531,00	100
11497	SMH 06 305	14.169,00	100
11498	SMH 06 324	14.613,00	100
11499	SMH 06 356	15.315,00	100
11500	SMH 06 407	26.490,00	100
11501	SMH 06 457	27.228,00	100
11502	SMH 06 508	11.335,00	100
11503	SMH 06 610	38.109,00	100
11504	SMH 06 712	41.910,00	100
11505	SMH 06 813	40.620,00	100
11506	SMH 06 915	41.956,00	100
11507	SMH 06 1016	53.496,00	100

with S+N

item number	designation	price Euro	price per
11508	SMH 06 22 S+N	1.330,00	100
11509	SMH 06 27 S+N	1.378,00	100
11510	SMH 06 34 S+N	1.489,00	100
11511	SMH 06 43 S+N	1.591,00	100
11512	SMH 06 49 S+N	1.642,00	100
11513	SMH 06 53 S+N	2.348,00	100
11514	SMH 06 61 S+N	2.549,00	100
11515	SMH 06 68 S+N	2.675,00	100
11516	SMH 06 77 S+N	2.753,00	100
11517	SMH 06 83 S+N	2.930,00	100
11518	SMH 06 89 S+N	2.981,00	100
11519	SMH 06 104 S+N	4.904,00	100
11520	SMH 06 108 S+N	5.396,00	100
11521	SMH 06 115 S+N	5.489,00	100
11522	SMH 06 129 S+N	5.654,00	100
11523	SMH 06 133 S+N	5.840,00	100
11524	SMH 06 140 S+N	5.957,00	100
11525	SMH 06 154 S+N	6.260,00	100
11526	SMH 06 159 S+N	6.446,00	100
11527	SMH 06 169 S+N	6.632,00	100
11528	SMH 06 191 S+N	7.427,00	100
11529	SMH 06 204 S+N	7.499,00	100
11530	SMH 06 220 S+N	7.943,00	100
11531	SMH 06 254 S+N	13.773,00	100
11532	SMH 06 273 S+N	13.947,00	100
11533	SMH 06 305 S+N	15.585,00	100
11534	SMH 06 324 S+N	16.029,00	100
11535	SMH 06 356 S+N	16.731,00	100
11536	SMH 06 407 S+N	28.716,00	100
11537	SMH 06 457 S+N	29.454,00	100
11538	SMH 06 508 S+N	30.564,00	100
11539	SMH 06 610 S+N	40.335,00	100
11540	SMH 06 712 S+N	44.136,00	100
11541	SMH 06 813 S+N	42.847,00	100
11542	SMH 06 915 S+N	44.383,00	100
11543	SMH 06 1016 S+N	55.922,00	100

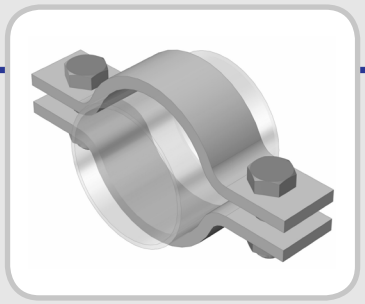

reinforced pipe clamp type SV DN 15 - 1100

S235JR

product group discount: 1770

without S+N

item number	designation	price Euro	price per
11657	SV 01 22	1.170,00	100
11658	SV 01 27	1.174,00	100
11659	SV 01 34	1.177,00	100
11660	SV 01 43	1.183,00	100
11661	SV 01 49	1.188,00	100
11662	SV 01 61	1.310,00	100
11663	SV 01 77	1.341,00	100
11664	SV 01 89	1.352,00	100
11665	SV 01 115	1.936,00	100
11666	SV 01 140	2.102,00	100
11667	SV 01 169	2.229,00	100
11668	SV 01 220	3.513,00	100
11669	SV 01 273	5.863,00	100
11670	SV 01 324	6.110,00	100
11671	SV 01 356	10.465,00	100
11672	SV 01 407	24.992,00	100
11673	SV 01 457	24.485,00	100
11674	SV 01 508	38.427,00	100
11675	SV 01 610	39.758,00	100
11676	SV 01 712	41.089,00	100
11677	SV 01 762	41.750,00	100
11678	SV 01 813	49.911,00	100
11679	SV 01 915	51.251,00	100
11680	SV 01 1016	52.582,00	100
11681	SV 01 1120	54.015,00	100

with S+N

item number	designation	price Euro	price per
11682	SV 01 22 S+N	1.229,00	100
11683	SV 01 27 S+N	1.233,00	100
11684	SV 01 34 S+N	1.236,00	100
11685	SV 01 43 S+N	1.242,00	100
11686	SV 01 49 S+N	1.247,00	100
11687	SV 01 61 S+N	1.454,00	100
11688	SV 01 77 S+N	1.485,00	100
11689	SV 01 89 S+N	1.497,00	100
11690	SV 01 115 S+N	2.139,00	100
11691	SV 01 140 S+N	2.305,00	100
11692	SV 01 169 S+N	2.432,00	100
11693	SV 01 220 S+N	4.498,00	100
11694	SV 01 273 S+N	6.821,00	100
11695	SV 01 324 S+N	7.095,00	100
11696	SV 01 356 S+N	11.450,00	100
11697	SV 01 407 S+N	26.247,00	100
11698	SV 01 457 S+N	26.800,00	100
11699	SV 01 508 S+N	39.682,00	100
11700	SV 01 610 S+N	41.013,00	100
11701	SV 01 712 S+N	42.344,00	100
11702	SV 01 762 S+N	43.005,00	100
11703	SV 01 813 S+N	51.167,00	100
11704	SV 01 915 S+N	52.506,00	100
11705	SV 01 1016 S+N	53.837,00	100
11706	SV 01 1120 S+N	55.270,00	100

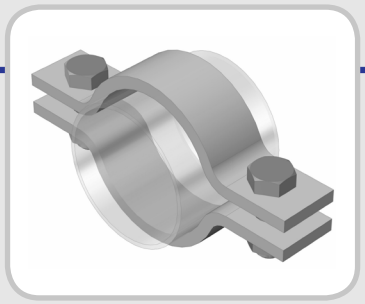

reinforced pipe clamp type SV DN 15 - 1100

1.4301 All prices without alloy surcharge.

product group discount: 1780

without S+N

item number	designation	price Euro	price per
11707	SV 05 22	1.294,00	100
11708	SV 05 27	1.308,00	100
11709	SV 05 34	1.319,00	100
11710	SV 05 43	1.342,00	100
11711	SV 05 49	1.360,00	100
11712	SV 05 61	1.817,00	100
11713	SV 05 77	1.933,00	100
11714	SV 05 89	1.975,00	100
11715	SV 05 115	4.005,00	100
11716	SV 05 140	4.314,00	100
11717	SV 05 169	6.177,00	100
11718	SV 05 220	9.510,00	100
11719	SV 05 273	23.892,00	100
11720	SV 05 324	25.062,00	100
11721	SV 05 356	27.180,00	100
11722	SV 05 407	47.370,00	100
11723	SV 05 457	52.398,00	100
11724	SV 05 508	71.494,00	100
11725	SV 05 610	76.864,00	100
11726	SV 05 712	82.233,00	100
11727	SV 05 762	84.901,00	100
11728	SV 05 813	95.068,00	100
11729	SV 05 915	100.472,00	100
11730	SV 05 1016	105.841,00	100
11731	SV 05 1120	111.621,00	100

with S+N

item number	designation	price Euro	price per
11732	SV 05 22 S+N	1.430,00	100
11733	SV 05 27 S+N	1.443,00	100
11734	SV 05 34 S+N	1.455,00	100
11735	SV 05 43 S+N	1.658,00	100
11736	SV 05 49 S+N	1.496,00	100
11737	SV 05 61 S+N	1.879,00	100
11738	SV 05 77 S+N	2.221,00	100
11739	SV 05 89 S+N	2.262,00	100
11740	SV 05 115 S+N	4.598,00	100
11741	SV 05 140 S+N	4.907,00	100
11742	SV 05 169 S+N	6.770,00	100
11743	SV 05 220 S+N	10.591,00	100
11744	SV 05 273 S+N	24.973,00	100
11745	SV 05 324 S+N	26.143,00	100
11746	SV 05 356 S+N	28.261,00	100
11747	SV 05 407 S+N	50.913,00	100
11748	SV 05 457 S+N	55.941,00	100
11749	SV 05 508 S+N	75.037,00	100
11750	SV 05 610 S+N	102.416,00	100
11751	SV 05 712 S+N	111.271,00	100
11752	SV 05 762 S+N	115.670,00	100
11753	SV 05 813 S+N	127.569,00	100
11754	SV 05 915 S+N	136.480,00	100
11755	SV 05 1016 S+N	145.335,00	100
11756	SV 05 1120 S+N	154.867,00	100

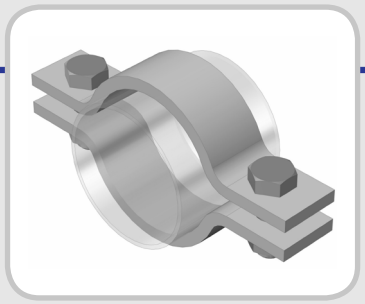

reinforced pipe clamp type SV DN 15 - 1100

1.4571 All prices without alloy surcharge.

product group discount: 1790

without S+N

item number	designation	price Euro	price per
11757	SV 06 22	1.416,00	100
11758	SV 06 27	1.439,00	100
11759	SV 06 34	1.459,00	100
11760	SV 06 43	1.498,00	100
11761	SV 06 49	1.529,00	100
11762	SV 06 61	1.864,00	100
11763	SV 06 77	1.989,00	100
11764	SV 06 89	2.033,00	100
11765	SV 06 115	4.020,00	100
11766	SV 06 140	4.664,00	100
11767	SV 06 169	7.332,00	100
11768	SV 06 220	9.510,00	100
11769	SV 06 273	24.234,00	100
11770	SV 06 324	25.449,00	100
11771	SV 06 356	27.600,00	100
11772	SV 06 407	52.344,00	100
11773	SV 06 457	69.793,00	100
11774	SV 06 508	93.561,00	100
11775	SV 06 610	102.416,00	100
11776	SV 06 712	111.271,00	100
11777	SV 06 762	115.670,00	100
11778	SV 06 813	127.569,00	100
11779	SV 06 915	136.480,00	100
11780	SV 06 1016	145.335,00	100
11781	SV 06 1120	154.867,00	100

with S+N

item number	designation	price Euro	price per
11782	SV 06 22 S+N	1.576,00	100
11783	SV 06 27 S+N	1.599,00	100
11784	SV 06 34 S+N	1.618,00	100
11785	SV 06 43 S+N	1.658,00	100
11786	SV 06 49 S+N	1.689,00	100
11787	SV 06 61 S+N	2.315,00	100
11788	SV 06 77 S+N	2.440,00	100
11789	SV 06 89 S+N	2.484,00	100
11790	SV 06 115 S+N	4.964,00	100
11791	SV 06 140 S+N	5.609,00	100
11792	SV 06 169 S+N	8.276,00	100
11793	SV 06 220 S+N	9.829,00	100
11794	SV 06 273 S+N	24.553,00	100
11795	SV 06 324 S+N	25.768,00	100
11796	SV 06 356 S+N	27.919,00	100
11797	SV 06 407 S+N	52.344,00	100
11798	SV 06 457 S+N	69.793,00	100
11799	SV 06 508 S+N	93.561,00	100
11800	SV 06 610 S+N	102.416,00	100
11801	SV 06 712 S+N	111.271,00	100
11802	SV 06 762 S+N	115.670,00	100
11803	SV 06 813 S+N	127.569,00	100
11804	SV 06 915 S+N	136.480,00	100
11805	SV 06 1016 S+N	145.335,00	100
11806	SV 06 1120 S+N	154.867,00	100

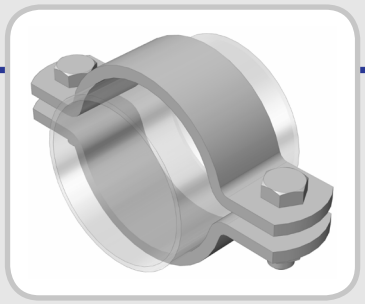

pipe clamp type SL DN 15 - 500 similar to DIN 3567-A

1.4301 All prices without alloy surcharge.

product group discount: 1270

without S+N

item number	designation	price Euro	price per
10517	SL 05 22	352,00	100
10518	SL 05 27	396,00	100
10519	SL 05 34	412,00	100
10520	SL 05 43	458,00	100
10521	SL 05 49	474,00	100
10522	SL 05 53	488,00	100
10523	SL 05 61	504,00	100
10524	SL 05 68	518,00	100
10525	SL 05 77	550,00	100
10526	SL 05 83	580,00	100
10527	SL 05 89	596,00	100
10840	SL 05 104	1.342,00	100
10528	SL 05 108	1.342,00	100
10529	SL 05 115	1.390,00	100
10841	SL 05 129	1.482,00	100
10530	SL 05 133	1.482,00	100
10531	SL 05 140	1.542,00	100
10842	SL 05 154	1.664,00	100
10532	SL 05 159	1.664,00	100
10533	SL 05 169	1.740,00	100
10534	SL 05 191	1.878,00	100
10535	SL 05 204	1.984,00	100
10536	SL 05 220	2.092,00	100
10537	SL 05 229	2.106,00	100
10538	SL 05 254	3.312,00	100
10539	SL 05 273	3.466,00	100
10540	SL 05 305	3.724,00	100
10541	SL 05 324	3.862,00	100
10542	SL 05 356	4.090,00	100
10544	SL 05 407	4.486,00	100
11242	SL 05 508	4.620,00	100

with S+N

item number	designation	price Euro	price per
10545	SL 05 22 S+N	412,00	100
10546	SL 05 27 S+N	504,00	100
10547	SL 05 34 S+N	518,00	100
10548	SL 05 43 S+N	566,00	100
10549	SL 05 49 S+N	580,00	100
10550	SL 05 53 S+N	596,00	100
10551	SL 05 61 S+N	610,00	100
10552	SL 05 68 S+N	640,00	100
10553	SL 05 77 S+N	672,00	100
10554	SL 05 83 S+N	702,00	100
10555	SL 05 89 S+N	718,00	100
10843	SL 05 104 S+N	1.512,00	100
10556	SL 05 108 S+N	1.512,00	100
10557	SL 05 115 S+N	1.556,00	100
10844	SL 05 129 S+N	1.664,00	100
10558	SL 05 133 S+N	1.664,00	100
10559	SL 05 140 S+N	1.726,00	100
10845	SL 05 154 S+N	1.832,00	100
10560	SL 05 159 S+N	1.832,00	100
10561	SL 05 169 S+N	1.922,00	100
10562	SL 05 191 S+N	2.062,00	100
10563	SL 05 204 S+N	2.152,00	100
10564	SL 05 220 S+N	2.274,00	100
10565	SL 05 229 S+N	2.290,00	100
10566	SL 05 254 S+N	3.678,00	100
10567	SL 05 273 S+N	3.846,00	100
10568	SL 05 305 S+N	4.090,00	100
10569	SL 05 324 S+N	4.228,00	100
10570	SL 05 356 S+N	4.486,00	100
10572	SL 05 407 S+N	4.854,00	100
11243	SL 05 508 S+N	4.988,00	100

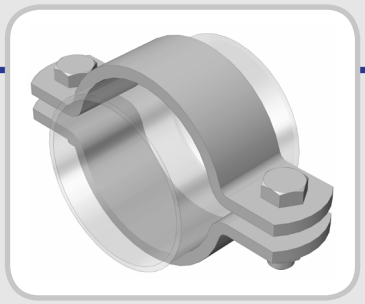

pipe clamp type SL DN 15 - 500 similar to DIN 3567-A

1.4571 All prices without alloy surcharge.

product group discount: 1280

without S+N

item number	designation	price Euro	price per
10639	SL 06 22	412,00	100
10640	SL 06 27	458,00	100
10641	SL 06 34	488,00	100
10642	SL 06 43	518,00	100
10643	SL 06 49	566,00	100
10644	SL 06 53	580,00	100
10645	SL 06 61	640,00	100
10646	SL 06 68	656,00	100
10647	SL 06 77	702,00	100
10648	SL 06 83	732,00	100
10649	SL 06 89	764,00	100
10846	SL 06 104	1.512,00	100
10650	SL 06 108	1.512,00	100
10651	SL 06 115	1.588,00	100
10847	SL 06 129	1.694,00	100
10652	SL 06 133	1.694,00	100
10653	SL 06 140	1.756,00	100
10848	SL 06 154	1.908,00	100
10654	SL 06 159	1.908,00	100
10655	SL 06 169	2.000,00	100
10656	SL 06 191	2.168,00	100
10657	SL 06 204	2.274,00	100
10658	SL 06 220	2.396,00	100
10659	SL 06 229	2.428,00	100
10660	SL 06 254	3.770,00	100
10661	SL 06 273	3.968,00	100
10662	SL 06 305	4.274,00	100
10663	SL 06 324	4.426,00	100
10664	SL 06 356	4.716,00	100
10665	SL 06 407	5.188,00	100
10666	SL 06 508	8.348,00	100

with S+N

item number	designation	price Euro	price per
10668	SL 06 22 S+N	498,00	100
10669	SL 06 27 S+N	610,00	100
10670	SL 06 34 S+N	640,00	100
10671	SL 06 43 S+N	672,00	100
10672	SL 06 49 S+N	718,00	100
10673	SL 06 53 S+N	732,00	100
10674	SL 06 61 S+N	780,00	100
10675	SL 06 68 S+N	794,00	100
10676	SL 06 77 S+N	870,00	100
10677	SL 06 83 S+N	880,00	100
10678	SL 06 89 S+N	902,00	100
10894	SL 06 104 S+N	1.756,00	100
10679	SL 06 108 S+N	1.756,00	100
10680	SL 06 115 S+N	1.800,00	100
10850	SL 06 129 S+N	1.938,00	100
10681	SL 06 133 S+N	1.938,00	100
10682	SL 06 140 S+N	2.000,00	100
10851	SL 06 154 S+N	2.136,00	100
10683	SL 06 159 S+N	2.136,00	100
10684	SL 06 169 S+N	2.228,00	100
10685	SL 06 191 S+N	2.396,00	100
10686	SL 06 204 S+N	2.502,00	100
10687	SL 06 220 S+N	2.640,00	100
10693	SL 06 229 S+N	2.672,00	100
10688	SL 06 254 S+N	4.274,00	100
10689	SL 06 273 S+N	4.472,00	100
10690	SL 06 305 S+N	4.778,00	100
10691	SL 06 324 S+N	4.914,00	100
10692	SL 06 356 S+N	5.220,00	100
10694	SL 06 407 S+N	5.678,00	100
10695	SL 06 508 S+N	9.310,00	100

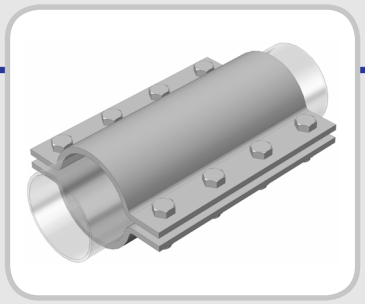

wide pipe clamp type SB DN 15 - 500

S235JR

product group discount: 12110

without S+N

item number	designation	price Euro	price per
11101	SB 01 22	3.423,00	100
11102	SB 01 27	3.504,00	100
11103	SB 01 34	3.539,00	100
11104	SB 01 43	3.642,00	100
11105	SB 01 49	3.655,00	100
11106	SB 01 53	4.170,00	100
11107	SB 01 61	4.248,00	100
11108	SB 01 68	4.326,00	100
11109	SB 01 77	4.427,00	100
11110	SB 01 83	4.521,00	100
11111	SB 01 89	4.583,00	100
11112	SB 01 104	4.592,00	100
11113	SB 01 108	4.650,00	100
11114	SB 01 115	4.721,00	100
11115	SB 01 129	4.825,00	100
11116	SB 01 133	4.884,00	100
11117	SB 01 140	4.981,00	100
11118	SB 01 154	5.111,00	100
11119	SB 01 159	5.163,00	100
11120	SB 01 169	5.274,00	100
11121	SB 01 191	6.069,00	100
11122	SB 01 204	6.231,00	100
11123	SB 01 220	6.394,00	100
11124	SB 01 254	6.836,00	100
11125	SB 01 273	7.063,00	100
11126	SB 01 305	8.268,00	100
11127	SB 01 324	8.470,00	100
11128	SB 01 356	8.801,00	100
11129	SB 01 407	11.157,00	100
11130	SB 01 457	11.858,00	100
11131	SB 01 508	12.541,00	100

with S+N

item number	designation	price Euro	price per
11132	SB 01 22 S+N	3.577,00	100
11133	SB 01 27 S+N	3.657,00	100
11134	SB 01 34 S+N	3.693,00	100
11135	SB 01 43 S+N	3.778,00	100
11136	SB 01 49 S+N	3.809,00	100
11137	SB 01 53 S+N	4.401,00	100
11138	SB 01 61 S+N	4.479,00	100
11139	SB 01 68 S+N	4.557,00	100
11140	SB 01 77 S+N	4.658,00	100
11141	SB 01 83 S+N	4.752,00	100
11142	SB 01 89 S+N	4.814,00	100
11143	SB 01 104 S+N	5.034,00	100
11144	SB 01 108 S+N	5.092,00	100
11145	SB 01 115 S+N	5.164,00	100
11146	SB 01 129 S+N	5.268,00	100
11147	SB 01 133 S+N	5.326,00	100
11148	SB 01 140 S+N	5.424,00	100
11149	SB 01 154 S+N	5.554,00	100
11150	SB 01 159 S+N	5.606,00	100
11151	SB 01 169 S+N	5.716,00	100
11152	SB 01 191 S+N	6.511,00	100
11153	SB 01 204 S+N	6.674,00	100
11154	SB 01 220 S+N	6.836,00	100
11155	SB 01 254 S+N	7.647,00	100
11156	SB 01 273 S+N	7.874,00	100
11157	SB 01 305 S+N	9.080,00	100
11158	SB 01 324 S+N	9.281,00	100
11159	SB 01 356 S+N	9.613,00	100
11160	SB 01 407 S+N	12.875,00	100
11161	SB 01 457 S+N	13.576,00	100
11162	SB 01 508 S+N	14.259,00	100

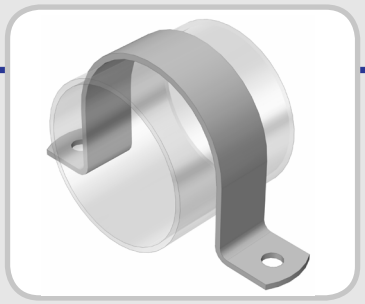

mounting clamp type BS DN 15 - 500

S235JR

product group discount: 1290

item number	designation	price Euro	price per
10977	BS 01 22	129,00	100
10978	BS 01 27	132,00	100
10979	BS 01 34	138,00	100
10980	BS 01 43	141,00	100
10981	BS 01 49	144,00	100
10982	BS 01 53	147,00	100
10983	BS 01 61	153,00	100
10984	BS 01 68	156,00	100
10985	BS 01 77	159,00	100
10986	BS 01 83	165,00	100
10987	BS 01 89	168,00	100
10988	BS 01 104	630,00	100
10989	BS 01 108	633,00	100
10990	BS 01 115	642,00	100
10991	BS 01 129	654,00	100
10992	BS 01 133	657,00	100
10993	BS 01 140	663,00	100
10994	BS 01 154	675,00	100
10995	BS 01 159	681,00	100
10996	BS 01 169	690,00	100
10997	BS 01 191	711,00	100
10998	BS 01 204	723,00	100
10999	BS 01 220	735,00	100
11000	BS 01 254	1.005,00	100
11001	BS 01 273	1.023,00	100
11002	BS 01 305	1.053,00	100
11003	BS 01 324	1.071,00	100
11004	BS 01 356	1.104,00	100
11005	BS 01 407	1.152,00	100
11006	BS 01 457	1.203,00	100
11007	BS 01 508	1.251,00	100

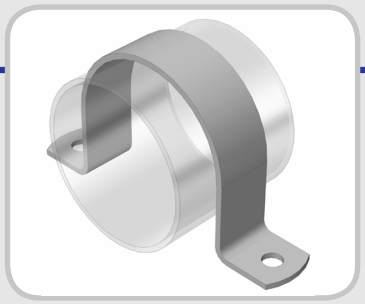

mounting clamp type BS DN 15 - 500

S235JR galvanized
product group discount: 1291
S235JR hot dip galvanized
product group discount: 1292

item number	designation	price Euro	price per	item number	designation	price Euro	price per
11008	BS 01 22 galv.	147,00	100	11626	BS 01 22 hdg	147,00	100
11009	BS 01 27 galv.	153,00	100	11627	BS 01 27 hdg	153,00	100
11010	BS 01 34 galv.	159,00	100	11628	BS 01 34 hdg	159,00	100
11011	BS 01 43 galv.	168,00	100	11629	BS 01 43 hdg	168,00	100
11012	BS 01 49 galv.	174,00	100	11630	BS 01 49 hdg	174,00	100
11013	BS 01 53 galv.	177,00	100	11631	BS 01 53 hdg	177,00	100
11014	BS 01 61 galv.	186,00	100	11632	BS 01 61 hdg	186,00	100
11015	BS 01 68 galv.	192,00	100	11633	BS 01 68 hdg	192,00	100
11016	BS 01 77 galv.	201,00	100	11634	BS 01 77 hdg	201,00	100
11017	BS 01 83 galv.	207,00	100	11635	BS 01 83 hdg	207,00	100
11018	BS 01 89 galv.	213,00	100	11636	BS 01 89 hdg	213,00	100
11019	BS 01 104 galv.	732,00	100	11637	BS 01 104 hdg	732,00	100
11020	BS 01 108 galv.	741,00	100	11638	BS 01 108 hdg	741,00	100
11021	BS 01 115 galv.	735,00	100	11639	BS 01 115 hdg	735,00	100
11022	BS 01 129 galv.	774,00	100	11640	BS 01 129 hdg	774,00	100
11023	BS 01 133 galv.	783,00	100	11641	BS 01 133 hdg	783,00	100
11024	BS 01 140 galv.	792,00	100	11642	BS 01 140 hdg	792,00	100
11025	BS 01 154 galv.	816,00	100	11643	BS 01 154 hdg	816,00	100
11026	BS 01 159 galv.	825,00	100	11644	BS 01 159 hdg	825,00	100
11027	BS 01 169 galv.	843,00	100	11645	BS 01 169 hdg	843,00	100
11028	BS 01 191 galv.	882,00	100	11646	BS 01 191 hdg	882,00	100
11029	BS 01 204 galv.	900,00	100	11647	BS 01 204 hdg	900,00	100
11030	BS 01 220 galv.	927,00	100	11648	BS 01 220 hdg	927,00	100
11031	BS 01 254 galv.	1.344,00	100	11649	BS 01 254 hdg	1.344,00	100
11032	BS 01 273 galv.	1.380,00	100	11650	BS 01 273 hdg	1.380,00	100
11033	BS 01 305 galv.	1.449,00	100	11651	BS 01 305 hdg	1.449,00	100
11034	BS 01 324 galv.	1.491,00	100	11652	BS 01 324 hdg	1.491,00	100
11035	BS 01 356 galv.	1.560,00	100	11653	BS 01 356 hdg	1.560,00	100
11036	BS 01 407 galv.	1.611,00	100	11654	BS 01 407 hdg	1.611,00	100
11037	BS 01 457 galv.	1.779,00	100	11655	BS 01 457 hdg	1.779,00	100
11038	BS 01 508 galv.	1.890,00	100	11656	BS 01 508 hdg	1.890,00	100

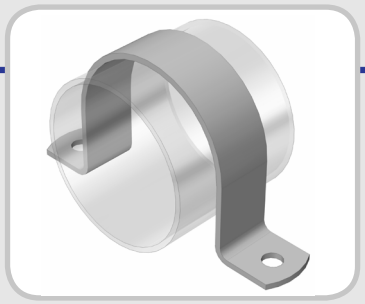

mounting clamp type BS DN 15 - 500

1.4301 All prices without alloy surcharge.
product group discount: 12100
1.4571 All prices without alloy surcharge.
product group discount: 12101

item number	designation	price Euro	price per
11039	BS 05 22	282,00	100
11040	BS 05 27	306,00	100
11041	BS 05 34	336,00	100
11042	BS 05 43	372,00	100
11043	BS 05 49	411,00	100
11044	BS 05 53	414,00	100
11045	BS 05 61	450,00	100
11046	BS 05 68	480,00	100
11047	BS 05 77	519,00	100
11048	BS 05 83	543,00	100
11049	BS 05 89	564,00	100
11050	BS 05 104	1.377,00	100
11051	BS 05 108	1.401,00	100
11052	BS 05 115	1.449,00	100
11053	BS 05 129	1.539,00	100
11054	BS 05 133	1.563,00	100
11055	BS 05 140	1.611,00	100
11056	BS 05 154	1.701,00	100
11057	BS 05 159	1.734,00	100
11058	BS 05 169	1.800,00	100
11059	BS 05 191	1.941,00	100
11060	BS 05 204	2.025,00	100
11061	BS 05 220	2.130,00	100
11062	BS 05 254	3.369,00	100
11063	BS 05 273	3.522,00	100
11064	BS 05 305	3.819,00	100
11065	BS 05 324	3.996,00	100
11066	BS 05 356	4.293,00	100
11067	BS 05 407	4.767,00	100
11068	BS 05 457	5.235,00	100
11069	BS 05 508	5.709,00	100

item number	designation	price Euro	price per
11070	BS 06 22	375,00	100
11071	BS 06 27	408,00	100
11072	BS 06 34	453,00	100
11073	BS 06 43	510,00	100
11074	BS 06 49	549,00	100
11075	BS 06 53	576,00	100
11076	BS 06 61	627,00	100
11077	BS 06 68	672,00	100
11078	BS 06 77	690,00	100
11079	BS 06 83	771,00	100
11080	BS 06 89	804,00	100
11081	BS 06 104	1.764,00	100
11082	BS 06 108	1.800,00	100
11083	BS 06 115	1.869,00	100
11084	BS 06 129	2.001,00	100
11085	BS 06 133	2.034,00	100
11086	BS 06 140	2.103,00	100
11087	BS 06 154	2.235,00	100
11088	BS 06 159	2.280,00	100
11089	BS 06 169	2.376,00	100
11090	BS 06 191	2.583,00	100
11091	BS 06 204	2.706,00	100
11092	BS 06 220	2.856,00	100
11093	BS 06 254	4.479,00	100
11094	BS 06 273	4.638,00	100
11095	BS 06 305	5.115,00	100
11096	BS 06 324	5.367,00	100
11097	BS 06 356	5.790,00	100
11098	BS 06 407	6.462,00	100
11099	BS 06 457	7.125,00	100
11100	BS 06 508	7.800,00	100

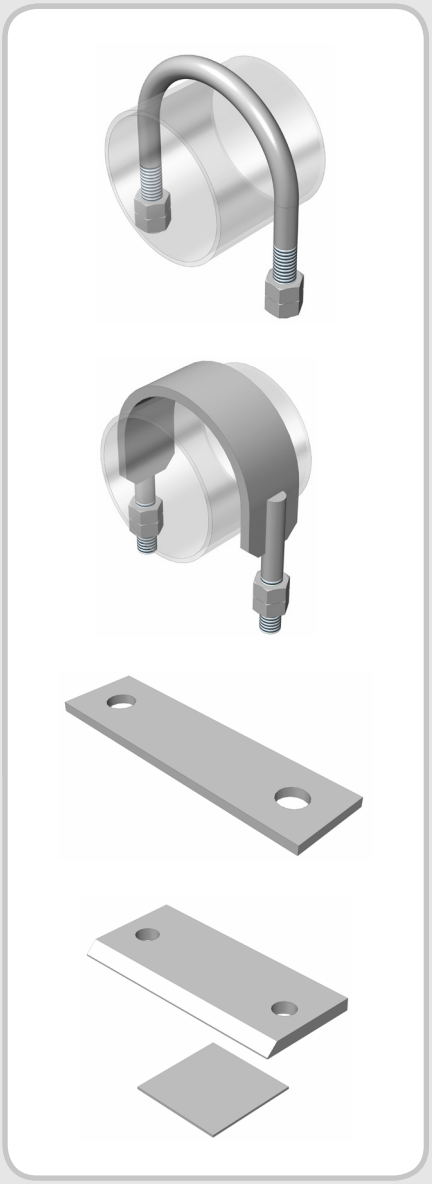

u-bolt
DIN 3570-A (type RB)
similar to DIN 3570-A (type RBL)

flat steel bolt
(type SBS)
(type SBR)

pipe underlay
(type RU for RB DIN 3570-A)
(type RUL for RBL similar to DIN 3570-A)
(type RUS for flat steel bolt type SBS)
(type RUR for flat steel bolt type SBR)

welding plate
(type ALRB for RB DIN 3570-A)
(type ALRBL for RBL similar to DIN 3570-A)

fitted plate
(type UB for all u-bolts)

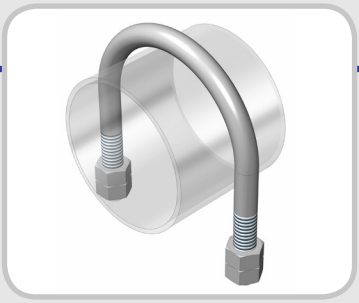

u-bolt
DIN 3570-A (type RB)
similar to DIN 3570-A (type RBL)

flat steel bolt
(type SBS and SBR)

pipe underlay
(type RU and RUL)
(type RUS and RUR)

For the order please provide the mandatory order data indicated in the technical drawings or the order number of the price sheets.

U-bolts are used as guide bearing or as a fix-point. The various usages are shown on the following pages. The threads are rolled and the hanger cold-formed.

Flat steel bolts are made of cold-formed steel with welded threaded parts. The various usages are identical to those of the u-bolts and are shown on the following pages.

Pipe underlays are made of polyethylene PEHD (-60° to +70°) as well as of 1.4301 and 1.4571. The various usages are shown on the following pages.

Welding plates and fitted plates are made of flat steels. The various usages are displayed on the following pages.

material:

material	internal material specification	max. operation temperature	nut quality
S235 JRG2 (S235JR)	01	300 °C	8
1.4301 (A2)	05		A2
1.4571 (A4)	06		A4
polyethylene PEHD	PEHD	-60° to +70°	

extra surface protection:
U-bolts are only delivered in galvanized form. Hot-dip galvanization available upon request. With flat steel bolts and welding plates any corrosion protection can be applied. We ask you to inform us regarding the coating system. These parts can be galvanized or hot dip galvanized. For hot dip galvanisation please contact us.

norms: see attachment 4.0 and 4.1

applications FL

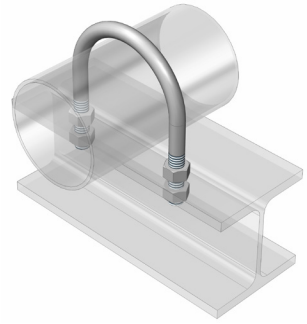

Assembly of the u-bolt through mounting holes on the substructure by the customer. With the mounting of 2 nuts above the substructure the bolt is adjusted higher and the movement of the pipe in axial direction is thus possible.

possible from DN 40 onwards

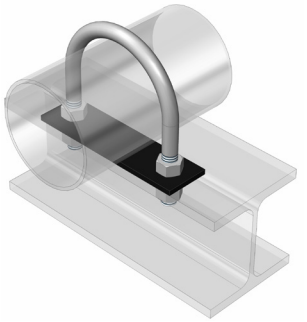

Assembly of the u-bolt through mounting holes on the substructure by the customer. With the mounting of 2 nuts above the substructure the bolt is adjusted higher and the movement of the pipe in axial direction is thus possible. For protecting the pipe or the substructure in case of an axial movement a pipe underlay can be used.

possible from DN 40 onwards

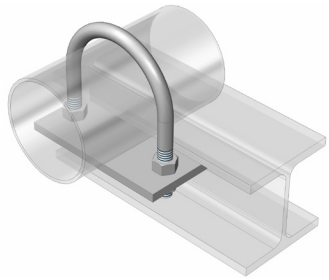

If drilling by the customer is not possible a welding plate can be welded to the substructure by the customer. It is provided with a welding chamfer.

possible from DN 40 onwards

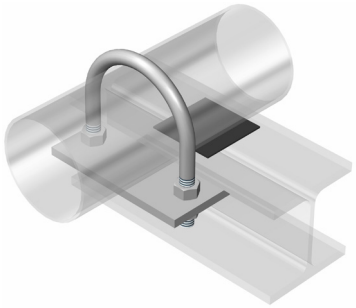

When using a stainless u-bolt a stainless fitted plate can be welded by the customer. By doing so there is no contact to the substructure made of normal construction steel as the stainless pipe is laterally protected by the stainless bolt and towards the substructure the pipe is protected by the fitted plate.

possible from DN 40 onwards

applications FP

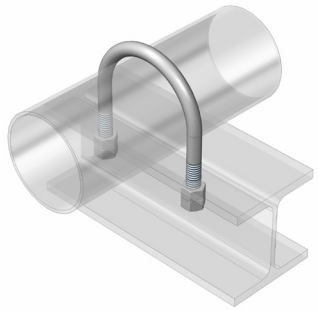

Assembly of the u-bolt through mounting holes to the substructure by the customer. By mounting four nuts below the substructure the bolt is pressed onto the pipe and therefore the pipe cannot move in axial direction.

possible from DN 15 onwards

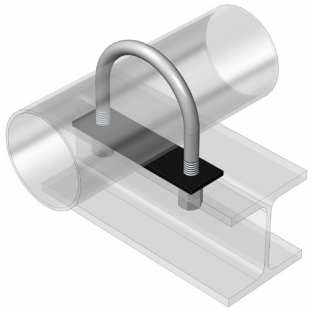

Assembly of the u-bolt through mounting holes to the substructure by the customer. By mounting four nuts below the substructure the bolt is pressed onto the pipe and therefore the pipe cannot move in axial direction. For protecting the pipe or the substructure a pipe underlay can be used.

possible from DN 15 onwards

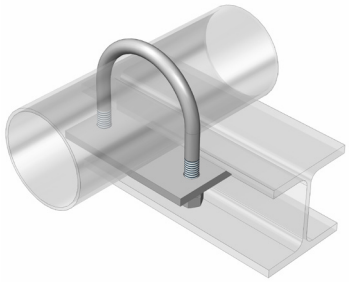

If drilling by the customer is not possible a welding plate can be welded to the substructure by the customer. It is provided with a welding chamfer. By mounting four nuts below the substructure the bolt is pressed onto the pipe and therefore the pipe cannot move in axial direction.

possible from DN 15 onwards

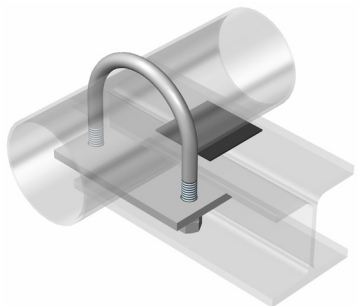

When using a stainless u-bolt a stainless fitted plate can be welded by the customer. By doing so there is no contact to the substructure made of normal construction steel as the stainless pipe is laterally protected by the stainless bolt and towards the substructure the pipe is protected by the fitted plate. By mounting four nuts below the substructure the bolt is pressed onto the pipe and therefore the pipe cannot move in axial direction.

possible from DN 15 onwards

u-bolt type RB

DN 15 - 500

DIN 3570-A

upright

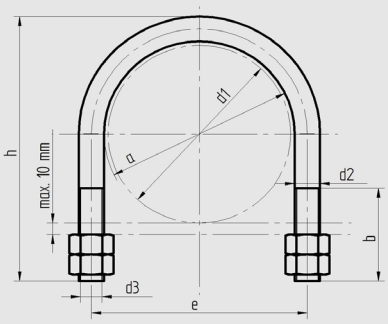

order example

type	material see 2.0.1	nominal diameter	extra	extra surface protection
RB	01	200		GAL

										suspended			upright	
d1	nominal diameter	a	clamping range	b	h	d2	d3	e	weight kg/pc.	Fx (kN)	Fy (kN)	-Fz (kN)	Fx (kN)	Fy (kN)
22	15	24	22	40	64	9	M 10	34	0,11	0,5	0,5	-5,9	1,0	1,0
27	20	30	25-27	40	70	9	M 10	40	0,12	0,4	0,4	-4,8	0,8	0,8
34	25	38	30-34	40	76	9	M 10	48	0,13	0,3	0,3	-3,9	0,6	0,6
43	32	46	38-43	50	86	9	M 10	56	0,14	0,2	0,2	-3,2	0,5	0,5
49	40	52	43-49	50	92	9	M 10	62	0,16	0,2	0,2	-2,8	0,4	0,4
61	50	64	57-61	50	109	10,7	M 12	76	0,27	0,3	0,3	-3,8	0,6	0,6
77	65	82	77	50	125	10,7	M 12	94	0,29	0,2	0,2	-3,0	0,5	0,5
89	80	94	89	50	138	10,7	M 12	106	0,33	0,2	0,2	-2,7	0,4	0,4
115	100	120	108-115	60	171	14,7	M 16	136	0,70	0,4	0,4	-5,2	0,8	0,8
140	125	148	133-140	60	191	14,7	M 16	164	0,79	0,3	0,3	-4,2	0,7	0,7
169	150	176	159-169	60	217	14,7	M 16	192	0,92	0,3	0,3	-3,7	0,6	0,6
220	200	228	216-220	70	283	18	M 20	248	1,80	0,4	0,4	-5,3	0,8	0,8
273	250	282	267-273	70	334	18	M 20	302	2,12	0,3	0,3	-4,3	0,6	0,6
324	300	332	318-324	70	385	18	M 20	352	2,47	0,3	0,3	-3,8	0,6	0,6
356	350	378	356-368	70	435	22	M 24	402	4,01	0,4	0,4	-6,0	0,9	0,9
407	400	428	407-419	70	487	22	M 24	452	4,47	0,4	0,4	-5,4	0,8	0,8
508	500	530	508-521	70	589	22	M 24	554	5,40	0,3	0,3	-4,5	0,6	0,6

b and h are minimum values and apply for a board thickness of 10 mm.
Measures deviating from the table need to be specially indicated with the order.

Actual measures of the pipe supports depend on the individual profile tolerance.
Basis for the calculation of the load values can be found on page 2.0, 2.1 and 2.2. Subject to technical modifications.

A-4614 Marchtrenk | Linzer Straße 141 | tel. 0043 7243 / 58 222 | fax 0043 7243 / 58 222 800 | e-mail: office@hammerschmid.at | www.hammerschmid.at

u-bolt type RBL

DN 15 - 500

similar to DIN 3570-A

upright

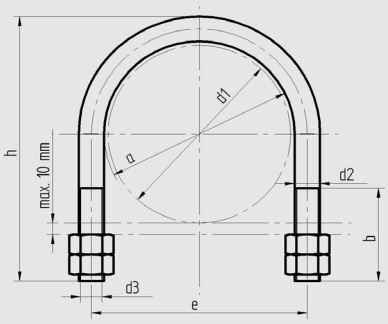

order example

type	material see 2.0.1	nominal diameter	extra	extra surface protection
RBL	01	200		GAL

										suspended			upright	
d1	nominal diameter	a	clamping range	b	h	d2	d3	e	weight kg/pc.	Fx (kN)	Fy (kN)	-Fz (kN)	Fx (kN)	Fy (kN)
22	15	27	22-25	40	65	7	M 8	35	0,05	0,2	0,2	-2,6	0,4	0,4
27	20	32	26-30	40	70	7	M 8	40	0,05	0,2	0,2	-2,2	0,3	0,3
34	25	40	31-38	40	76	7	M 8	48	0,05	0,1	0,1	-1,8	0,3	0,3
43	32	48	32-46	50	86	7	M 8	56	0,06	0,1	0,1	-1,5	0,2	0,2
49	40	54	48-52	50	92	7	M 8	62	0,06	0,1	0,1	-1,3	0,2	0,2
53	50	58	53-57	50	101	9	M 10	68	0,12	0,2	0,2	-2,6	0,4	0,4
61	50	66	58-64	50	109	9	M 10	76	0,13	0,2	0,2	-2,3	0,3	0,3
68	65	72	66-70	50	115	9	M 10	82	0,14	0,2	0,2	-2,1	0,3	0,3
77	65	84	72-82	50	125	9	M 10	94	0,15	0,1	0,1	-1,8	0,3	0,3
83	80	88	82-86	50	131	9	M 10	98	0,16	0,1	0,1	-1,7	0,3	0,3
89	80	96	88-94	50	138	9	M 10	106	0,16	0,1	0,1	-1,6	0,2	0,2
104/108	100	114	104-108	60	161	10,7	M 12	130	0,27	0,2	0,2	-2,2	0,3	0,3
115	100	124	110-120	60	171	10,7	M 12	136	0,29	0,2	0,2	-2,1	0,3	0,3
129/133	125	140	129-133	60	187	10,7	M 12	152	0,32	0,1	0,1	-1,8	0,3	0,3
140	125	152	135-148	60	191	10,7	M 12	164	0,33	0,1	0,1	-1,7	0,3	0,3
154/159	150	164	154-159	60	211	10,7	M 12	176	0,36	0,1	0,1	-1,6	0,2	0,2
169	150	176	162-170	60	217	10,7	M 12	188	0,37	0,1	0,1	-1,5	0,2	0,2
204/207	200	215	204-207	70	271	14,7	M 16	231	0,86	0,2	0,2	-3,0	0,5	0,5
220	200	228	210-224	70	283	14,7	M 16	244	0,90	0,2	0,2	-3,0	0,4	0,4
254/257	250	265	254-257	70	321	14,7	M 16	281	1,02	0,2	0,2	-2,6	0,4	0,4
273	250	282	265-278	70	334	14,7	M 16	298	1,07	0,2	0,2	-2,5	0,4	0,4
304/308	300	316	304-308	70	372	14,7	M 16	332	1,20	0,2	0,2	-2,2	0,3	0,3
324	300	332	318-324	70	385	14,7	M 16	348	1,50	0,2	0,2	-2,1	0,3	0,3
356	350	378	356-368	70	435	14,7	M 16	394	1,39	0,1	0,1	-1,9	0,3	0,3
407	400	428	407-419	70	487	18	M 20	448	2,42	0,2	0,2	-3,1	0,4	0,4
508	500	530	508-521	70	589	18	M 20	550	2,94	0,2	0,2	-2,6	0,3	0,3

b and h are minimum values and apply for a board thickness of 10 mm.
Measures deviating from the table need to be specially indicated with the order.

Actual measures of the pipe supports depend on the individual profile tolerance.
Basis for the calculation of the load values can be found on page 2.0, 2.1 and 2.2. Subject to technical modifications.

A-4614 Marchtrenk | Linzer Straße 141 | tel. 0043 7243 / 58 222 | fax 0043 7243 / 58 222 800 | e-mail: office@hammerschmid.at | www.hammerschmid.at

flat steel bolt type SBS

DN 100 - 800

upright

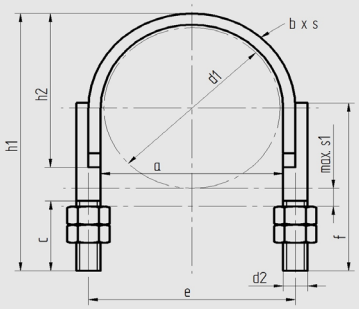

order example

type	material see 2.0.1	pipe diameter d1	extra	extra surface protection
SBS	01	169		GAL

													suspended			upright	
d1	nominal diameter	a	c	e	h1	h2	f	s1	d2	flat steel bxs	screws used	weight kg/pc.	Fx (kN)	Fy (kN)	-Fz (kN)	Fx (kN)	Fy (kN)
115	100	119	50	135	184	110	120	30	M 16	50x8	M 16	1,10	0,4	0,4	-5,6	0,9	0,9
140	125	145	50	161	206	131	120	26	M 16	50x8	M 16	1,30	0,4	0,4	-4,7	0,7	0,7
169	150	176	80	192	230	140	140	20	M 16	50x8	M 16	1,70	0,3	0,3	-4,0	0,6	0,6
220	200	228	80	244	280	190	140	19	M 16	50x8	M 16	2,10	0,2	0,2	-3,2	0,5	0,5
273	250	282	80	298	340	250	140	25	M 16	50x8	M 16	2,50	0,2	0,2	-2,7	0,4	0,4
324	300	332	100	352	400	280	200	27	M 20	60x8	M 20	3,80	0,3	0,3	-3,7	0,6	0,6
356	350	378	100	398	430	310	200	25	M 20	60x8	M 20	4,20	0,3	0,3	-3,4	0,6	0,6
407	400	428	100	448	480	360	200	24	M 20	60x8	M 20	4,70	0,3	0,3	-3,1	0,5	0,5
508	500	530	100	550	590	470	200	33	M 20	60x8	M 20	5,70	0,2	0,2	-2,7	0,4	0,4
610	600	635	120	659	710	560	270	41	M 24	80x10	M 24	11,30	0,3	0,3	-4,0	0,6	0,6
712	700	735	120	759	810	660	270	40	M 24	80x10	M 24	12,90	0,3	0,3	-3,4	0,5	0,5
813	800	835	120	859	910	760	270	38	M 24	80x10	M 24	14,50	0,2	0,2	-3,0	0,5	0,5

Actual measures of the pipe supports depend on the individual profile tolerance.
Basis for the calculation of the load values can be found on page 2.0, 2.1 and 2.2. Subject to technical modifications.

flat steel bolt type SBR

DN 100 - 800

upright

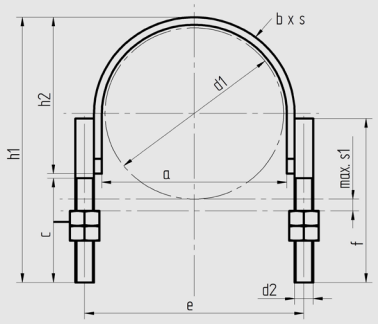

order example

type	material see 2.0.1	pipe diameter d1	extra	extra surface protection
SBR	05	169		

													suspended			upright	
d1	nominal diameter	a	c	e	h1	h2	f	s1	d2	flat steel bxs	screws used	weight kg/pc.	Fx (kN)	Fy (kN)	-Fz (kN)	Fx (kN)	Fy (kN)
115	100	119	50	141	181	110	120	30	M 12	40x5	M 12	0,90	0,13	0,13	-1,45	0,26	0,26
140	125	145	50	167	203	131	120	26	M 12	40x5	M 12	0,99	0,07	0,07	-1,19	0,20	0,20
169	150	173	80	195	225	140	140	20	M 12	40x5	M 12	1,12	0,07	0,07	-1,06	0,13	0,13
220	200	224	80	246	275	190	140	19	M 12	40x5	M 12	1,33	0,07	0,07	-0,86	0,13	0,13
273	250	278	80	304	344	250	140	25	M 16	50x5	M 16	2,13	0,13	0,13	-1,32	0,26	0,26
324	300	329	100	355	397	280	200	27	M 16	50x5	M 16	2,59	0,13	0,13	-1,19	0,20	0,20
356	350	361	100	387	427	310	200	25	M 16	50x5	M 16	2,75	0,07	0,07	-1,12	0,20	0,20
407	400	411	100	437	476	360	200	24	M 16	50x5	M 16	3,00	0,07	0,07	-1,06	0,20	0,20
508	500	513	100	539	587	470	200	33	M 16	50x5	M 16	3,56	0,07	0,07	-0,92	0,13	0,13
610	600	615	120	651	705	560	270	41	M 20	60x8	M 20	8,09	0,13	0,13	-1,52	0,26	0,26
712	700	716	120	752	805	660	270	40	M 20	60x8	M 20	9,07	0,13	0,13	-1,32	0,20	0,20
813	800	818	120	854	905	760	270	38	M 20	60x8	M 20	10,07	0,07	0,07	-1,19	0,20	0,20

Actual measures of the pipe supports depend on the individual profile tolerance.
Basis for the calculation of the load values can be found on page 2.0, 2.1 and 2.2. Subject to technical modifications.

pipe underlay type RU for RB DIN 3570-A

DN 15 - 500

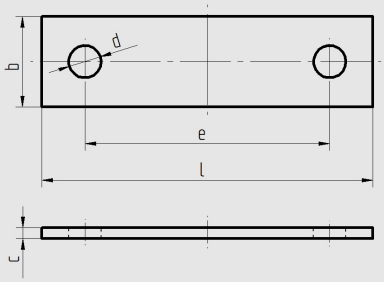

order example

type	material see 2.0.1	e	extra	extra surface protection
RU	PEHD	164		

polyethylene PEHD 1.4301/1.4571

nominal diameter	for pipe diameter	b	c	d	e	l	weight kg/pc.	weight kg/pc.
15	22	30	5 | 3*	11,5	34	64	0,080	0,060
20	27	30	5 | 3*	11,5	40	70	0,010	0,065
25	34	30	5 | 3*	11,5	48	78	0,010	0,073
32	43	30	5 | 3*	11,5	56	86	0,012	0,080
40	49	30	5 | 3*	11,5	62	92	0,013	0,086
50	61	40	6 | 3*	14	76	112	0,026	0,105
65	77	40	6 | 3*	14	94	130	0,028	0,122
80	89	40	6 | 3*	14	106	142	0,033	0,133
100	115	50	6 | 3*	18	136	184	0,046	0,215
125	140	50	6 | 3*	18	164	212	0,051	0,248
150	169	50	6 | 3*	18	192	240	0,055	0,280
200	220	60	6 | 4*	23	248	308	0,083	0,550
250	273	60	6 | 4*	23	302	362	0,101	0,680
300	324	60	6 | 4*	23	352	412	0,115	0,770
350	356	70	6 | 4*	27	402	474	0,147	1,010
400	407	70	6 | 4*	27	452	524	0,170	1,140
500	508	70	6 | 4*	27	554	626	0,202	1,400

The dimensions indicated with * are only valid for 1.4301 and 1.4571.

Actual measures of the pipe supports depend on the individual profile tolerance.
Basis for the calculation of the load values can be found on page 2.0, 2.1 and 2.2. Subject to technical modifications.

pipe underlay type RUL for RBL similar to DIN 3570-A

DN 15 - 500

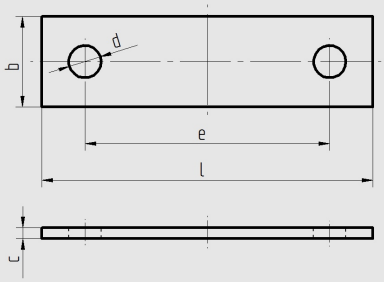

order example

type	material see 2.0.1	e	extra	extra surface protection
RUL	PEHD	164		

polyethylene PEHD 1.4301/1.4571

nominal diameter	for pipe diameter	b	c	d	e	l	weight kg/pc.	weight kg/pc.
15	22	30	5 | 3*	9	35	65	0,010	0,078
20	27	30	5 | 3*	9	40	70	0,011	0,084
25	34	30	5 | 3*	9	48	78	0,012	0,094
32	43	30	5 | 3*	9	56	86	0,013	0,103
40	49	30	5 | 3*	9	62	92	0,014	0,110
50	53	30	5 | 3*	11,5	68	98	0,016	0,127
50	61	30	5 | 3*	11,5	76	106	0,016	0,127
65	68	30	5 | 3*	11,5	82	112	0,019	0,149
65	77	30	5 | 3*	11,5	94	124	0,019	0,149
80	83	30	5 | 3*	11,5	98	128	0,020	0,163
80	89	30	5 | 3*	11,5	106	136	0,020	0,163
100	104/108	40	6 | 3*	14	130	166	0,041	0,330
100	115	40	6 | 3*	14	136	172	0,041	0,330
125	129/133	40	6 | 3*	14	152	188	0,048	0,384
125	140	40	6 | 3*	14	164	200	0,048	0,384
150	154/159	40	6 | 3*	14	176	212	0,054	0,430
150	169	40	6 | 3*	14	188	224	0,054	0,430
200	204/207	50	6 | 3*	18	231	279	0,088	0,701
200	220	50	6 | 3*	18	244	292	0,088	0,701
250	254/257	50	6 | 3*	18	281	329	0,104	0,830
250	273	50	6 | 3*	18	298	346	0,104	0,830
300	304/308	50	6 | 3*	18	332	380	0,119	0,950
300	324	50	6 | 3*	18	348	396	0,119	0,950
350	356	50	6 | 3*	18	394	442	0,133	1,061
400	407	60	6 | 4*	22	448	508	0,183	1,463
500	508	60	6 | 4*	22	550	610	0,220	1,757

The dimensions indicated with * are only valid for 1.4301 and 1.4571.

Actual measures of the pipe supports depend on the individual profile tolerance.
Basis for the calculation of the load values can be found on page 2.0, 2.1 and 2.2. Subject to technical modifications.

pipe underlay type RUS for flat steel bolt type SBS

DN 100 - 800

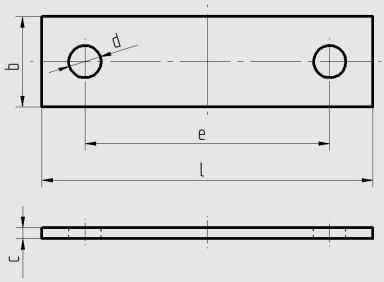

order example

type	material see 2.0.1	e	extra	extra surface protection
RUS	PEHD	135		

polyethylene PEHD

nominal diameter	for pipe diameter	b	c	d	e	l	weight kg/pc.
100	115	50	6	18	135	183	0,045
125	140	50	6	18	161	209	0,050
150	169	50	6	18	192	240	0,055
200	220	50	6	18	244	292	0,066
250	273	50	6	18	298	346	0,078
300	324	60	6	23	352	412	0,110
350	356	60	6	23	398	458	0,130
400	407	60	6	23	448	508	0,140
500	508	60	6	23	550	610	0,160
600	610	70	6	27	659	731	0,233
700	712	70	6	27	759	831	0,260
800	813	70	6	27	859	931	0,290

Actual measures of the pipe supports depend on the individual profile tolerance.
Basis for the calculation of the load values can be found on page 2.0, 2.1 and 2.2. Subject to technical modifications.

pipe underlay type RUR for flat steel bolt type SBR

DN 100 - 800

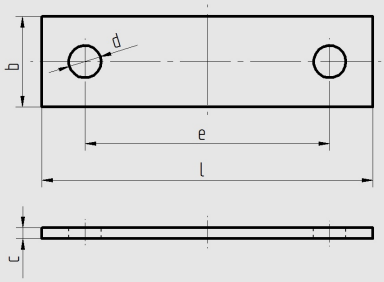

order example

type	material see 2.0.1	e	extra	extra surface protection
RUR	05	141		

nominal diameter	for pipe diameter	b	c	d	e	l	1.4301 weight kg/pc.
100	115	40	3	14	141	177	0,166
125	140	40	3	14	167	203	0,191
150	169	40	3	14	195	231	0,217
200	220	40	3	14	246	282	0,265
250	273	50	3	18	304	352	0,412
300	324	50	3	18	355	403	0,472
350	356	50	3	18	387	435	0,509
400	407	50	3	18	437	485	0,567
500	508	50	3	18	539	587	0,687
600	610	60	4	23	651	711	1,337
700	712	60	4	23	752	812	1,527
800	813	60	4	23	854	914	1,718

Actual measures of the pipe supports depend on the individual profile tolerance.
Basis for the calculation of the load values can be found on page 2.0, 2.1 and 2.2. Subject to technical modifications.

A-4614 Marchtrenk | Linzer Straße 141 | tel. 0043 7243 / 58 222 | fax 0043 7243 / 58 222 800 | e-mail: office@hammerschmid.at | www.hammerschmid.at

welding plate

DN 15 - 250
type ALRB for RB DIN 3570-A
type ALRBL for RBL similar to DIN 3570-A

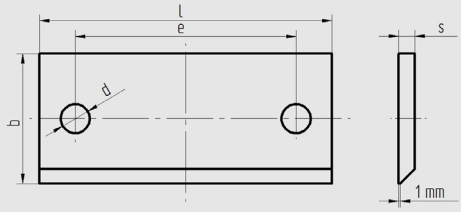

order example

type	material see 2.0.1	nominal diameter	extra	extra surface protection
ALRB	01	15		

d1	nominal diameter	flat steel bxs	l	e	d	weight kg/pc.
22	15	60x10	70	35	12	0,33
27	20	60x10	70	40	12	0,33
34	25	60x10	80	48	12	0,38
43	32	60x10	90	56	12	0,43
49	40	60x10	100	62	12	0,48
61	50	80x10	120	76	14	0,76
77	65	80x10	140	94	14	0,89
89	80	80x10	150	106	14	0,96
115	100	80x10	180	136	18	1,15
140	125	80x10	210	164	18	1,34
169	150	80x10	240	192	18	1,53
220	200	120x10	310	248	22	2,97
273	250	120x10	360	302	22	3,45

order example

type	material see 2.0.1	nominal diameter	extra	extra surface protection
ALRBL	01	15		

d1	nominal diameter	flat steel bxs	l	e	d	weight kg/pc.
22	15	60x10	70	35	10	0,33
27	20	60x10	70	40	10	0,33
34	25	60x10	80	48	10	0,38
43	32	60x10	90	56	10	0,43
49	40	60x10	100	62	10	0,48
61	50	80x10	120	76	12	0,76
77	65	80x10	140	94	12	0,89
89	80	80x10	150	106	12	0,96
115	100	80x10	180	136	14	1,15
140	125	80x10	210	164	14	1,34
169	150	80x10	240	188	14	1,53
220	200	120x10	310	244	18	2,97
273	250	120x10	360	298	18	3,45

Actual measures of the pipe supports depend on the individual profile tolerance.
Basis for the calculation of the load values can be found on page 2.0, 2.1 and 2.2. Subject to technical modifications.

fitted plate type UB for u-bolts

DN 15 - 250

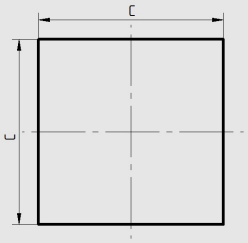

order example

type	material see 2.0.1	nominal diameter	extra	extra surface protection
UB	06	15		

nominal diameter	sheet metal c	s	weight kg/pc.
15	50	2	0,04
20	50	2	0,04
25	50	2	0,04
32	50	2	0,04
40	50	2	0,04
50	50	2	0,04
65	80	2	0,10
80	80	2	0,10
100	80	2	0,10
125	80	2	0,10
150	80	2	0,16
200	80	2	0,16
250	80	2	0,16

Actual measures of the pipe supports depend on the individual profile tolerance.
Basis for the calculation of the load values can be found on page 2.0, 2.1 and 2.2. Subject to technical modifications.

ROHRBEFESTIGUNGEN
Hammerschmid
GmbH

REQUEST/ORDER FAX FOR special u-bolts

company: _____

name: _____

telephone: _____

fax: _____

Please fill in your requested measures.
We will get in touch with you as soon as possible.

I

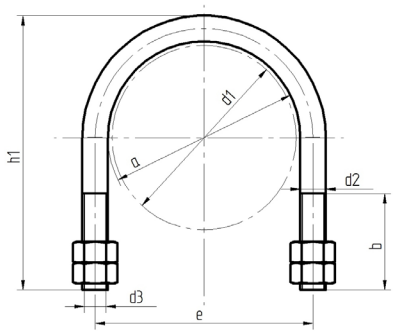

II

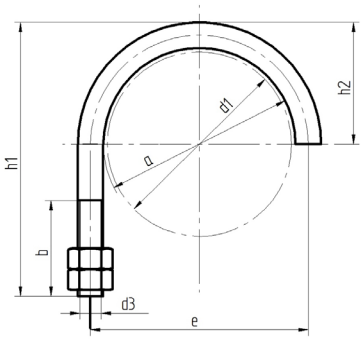

III

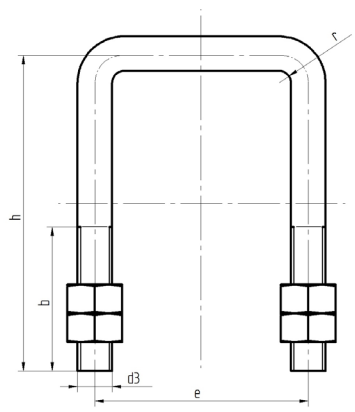

u-bolt

material: _____

quantity: _____

type: I O II O III O

(tick the required type)

e _____

a _____

b _____

d1 _____

d3 _____

h1 _____

h2 _____

r _____

_____

signature/stamp

A-4614 Marchtrenk | Linzer Straße 141 | tel. 0043 7243 / 58 222 | fax 0043 7243 / 58 222 800 | e-mail: office@hammerschmid.at | www.hammerschmid.at

TÜV AUSTRIA CE EN 1090-1:2009 zertifiziert EDELSTAHL Rostfrei

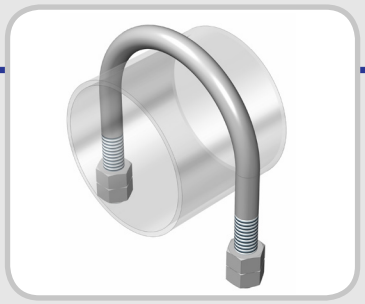

u-bolt type RB DN 15 - 500 DIN 3570-A
S235JR galvanized
product group discount: 2210

item number	designation	price Euro	price per
20018	RB 01 15 galv.	176,00	100
20019	RB 01 20 galv.	176,00	100
20020	RB 01 25 galv.	176,00	100
20021	RB 01 32 galv.	192,00	100
20022	RB 01 40 galv.	208,00	100
20023	RB 01 50 galv.	240,00	100
20024	RB 01 65 galv.	256,00	100
20025	RB 01 80 galv.	256,00	100
20026	RB 01 100 galv.	496,00	100
20027	RB 01 125 galv.	528,00	100
20028	RB 01 150 galv.	560,00	100
20029	RB 01 200 galv.	1.858,00	100
20030	RB 01 250 galv.	1.986,00	100
20031	RB 01 300 galv.	2.098,00	100
20032	RB 01 350 galv.	2.788,00	100
20033	RB 01 400 galv.	3.508,00	100
20034	RB 01 500 galv.	3.828,00	100

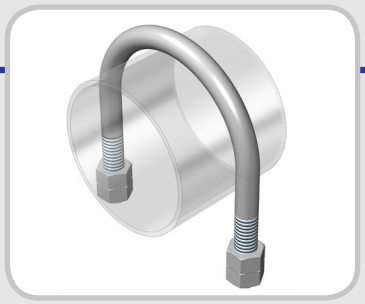

u-bolt type RB DN 15 - 500 DIN 3570-A

1.4301 All prices without alloy surcharge.
product group discount: 2230
1.4571 All prices without alloy surcharge.
product group discount: 2231

item number	designation	price Euro	price per
20069	RB 05 15	322,00	100
20070	RB 05 20	336,00	100
20071	RB 05 25	352,00	100
20072	RB 05 32	396,00	100
20073	RB 05 40	444,00	100
20074	RB 05 50	610,00	100
20075	RB 05 65	656,00	100
20076	RB 05 80	688,00	100
20077	RB 05 100	1.938,00	100
20078	RB 05 125	2.062,00	100
20079	RB 05 150	2.198,00	100
20080	RB 05 200	4.992,00	100
20081	RB 05 250	5.510,00	100
20082	RB 05 300	5.998,00	100
20083	RB 05 350	9.156,00	100
20084	RB 05 400	9.920,00	100
20085	RB 05 500	11.384,00	100

item number	designation	price Euro	price per
20103	RB 06 15	366,00	100
20104	RB 06 20	382,00	100
20105	RB 06 25	412,00	100
20106	RB 06 32	444,00	100
20107	RB 06 40	504,00	100
20108	RB 06 50	688,00	100
20109	RB 06 65	748,00	100
20110	RB 06 80	764,00	100
20111	RB 06 100	2.152,00	100
20112	RB 06 125	2.320,00	100
20113	RB 06 150	2.488,00	100
20114	RB 06 200	5.890,00	100
20115	RB 06 250	6.518,00	100
20116	RB 06 300	7.188,00	100
20117	RB 06 350	10.988,00	100
20118	RB 06 400	11.950,00	100
20119	RB 06 500	13.858,00	100

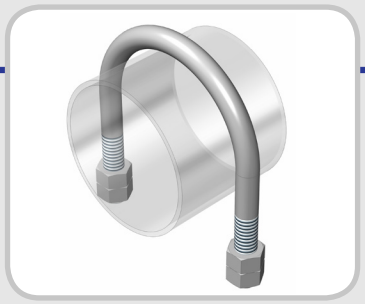

u-bolt type RBL DN 15 - 500 similar to DIN 3570-A
S235JR galvanized
product group discount: 2220

item number	designation	price Euro	price per
20200	RBL 01 15 galv.	146,00	100
20201	RBL 01 20 galv.	146,00	100
20202	RBL 01 25 galv.	146,00	100
20203	RBL 01 32 galv.	162,00	100
20204	RBL 01 40 galv.	178,00	100
20205	RBL 01 50 for D = 53 mm galv.	208,00	100
20206	RBL 01 50 galv.	224,00	100
20207	RBL 01 65 for D = 68mm galv.	240,00	100
20208	RBL 01 65 galv.	240,00	100
20209	RBL 01 80 for D = 83mm galv.	256,00	100
20210	RBL 01 80 galv.	256,00	100
20211	RBL 01 100 for D = 104/108 mm galv.	418,00	100
20212	RBL 01 100 galv.	418,00	100
20213	RBL 01 125 for D = 129/133 mm galv.	450,00	100
20214	RBL 01 125 galv.	450,00	100
20215	RBL 01 150 for D = 154/159 mm galv.	464,00	100
20216	RBL 01 150 galv.	464,00	100
20217	RBL 01 200 for D = 204/207 mm galv.	1.618,00	100
20218	RBL 01 200 galv.	1.618,00	100
20219	RBL 01 250 for D = 254/257 mm galv.	1.694,00	100
20220	RBL 01 250 galv.	1.694,00	100
20221	RBL 01 300 for D = 304/308 mm galv.	1.786,00	100
20222	RBL 01 300 galv.	1.786,00	100
20223	RBL 01 350 galv.	1.874,00	100
20224	RBL 01 400 galv.	2.852,00	100
20225	RBL 01 500 galv.	3.156,00	100

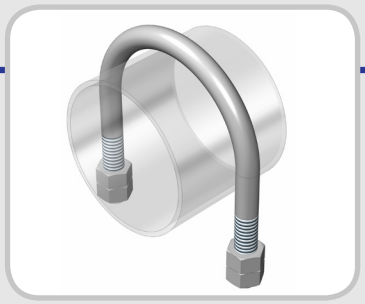

u-bolt type RBL DN 15 - 500 similar to DIN 3570-A

1.4301 All prices without alloy surcharge.
product group discount: 2240
1.4571 All prices without alloy surcharge.
product group discount: 2241

item number	designation	price Euro	price per	item number	designation	price Euro	price per
20300	RBL 05 15	290,00	100	20400	RBL 06 15	336,00	100
20301	RBL 05 20	298,00	100	20401	RBL 06 20	352,00	100
20302	RBL 05 25	322,00	100	20402	RBL 06 25	382,00	100
20303	RBL 05 32	366,00	100	20403	RBL 06 32	412,00	100
20304	RBL 05 40	405,00	100	20404	RBL 06 40	474,00	100
20305	RBL 05 50 for D = 53 mm	488,00	100	20405	RBL 06 50 for D = 53 mm	580,00	100
20306	RBL 05 50	488,00	100	20406	RBL 06 50	580,00	100
20307	RBL 05 65 for D = 68 mm	580,00	100	20407	RBL 06 65 for D = 68 mm	672,00	100
20308	RBL 05 65	580,00	100	20408	RBL 06 65	672,00	100
20309	RBL 05 80 for D = 83 mm	610,00	100	20409	RBL 06 80 for D = 83 mm	702,00	100
20310	RBL 05 80	610,00	100	20410	RBL 06 80	702,00	100
20311	RBL 05 100 for D = 104/108 mm	1.146,00	100	20411	RBL 06 100 for D = 104/108 mm	1.298,00	100
20312	RBL 05 100	1.146,00	100	20412	RBL 06 100	1.298,00	100
20313	RBL 05 125 for D = 129/133 mm	1.190,00	100	20413	RBL 06 125 for D = 129/133 mm	1.342,00	100
20314	RBL 05 125	1.190,00	100	20414	RBL 06 125	1.342,00	100
20315	RBL 05 150 for D = 154/159 mm	1.282,00	100	20415	RBL 06 150 for D = 154/159 mm	1.466,00	100
20316	RBL 05 150	1.282,00	100	20416	RBL 06 150	1.466,00	100
20317	RBL 05 200 for D = 204/207 mm	3.114,00	100	20417	RBL 06 200 for D = 204/207 mm	3.662,00	100
20318	RBL 05 200	3.114,00	100	20418	RBL 06 200	3.662,00	100
20319	RBL 05 250 for D = 254/257 mm	3.404,00	100	20419	RBL 06 250 for D = 254/257 mm	4.212,00	100
20320	RBL 05 250	3.404,00	100	20420	RBL 06 250	4.212,00	100
20321	RBL 05 300 for D = 304/308 mm	3.710,00	100	20421	RBL 06 300 for D = 304/308 mm	4.884,00	100
20322	RBL 05 300	3.710,00	100	20422	RBL 06 300	4.884,00	100
20323	RBL 05 350	3.984,00	100	20423	RBL 06 350	6.028,00	100
20324	RBL 05 400	7.556,00	100	20424	RBL 06 400	10.760,00	100
20325	RBL 05 500	8.562,00	100	20425	RBL 06 500	12.240,00	100

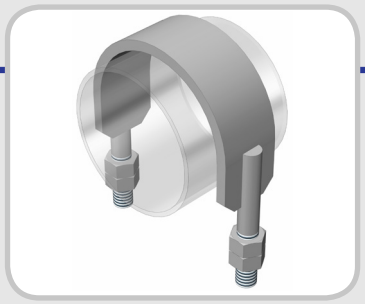

flat steel bolt type SBS DN 100 - 800

S235JR

product group discount: 2250

flat steel bolt type SBR DN 100 - 800

1.4301 All prices without alloy surcharge.

product group discount: 2251

item number	designation	price Euro	price per
20173	SBS 01 115	3.968,00	100
20174	SBS 01 140	3.984,00	100
20175	SBS 01 169	4.028,00	100
20176	SBS 01 220	4.120,00	100
20177	SBS 01 273	4.456,00	100
20178	SBS 01 324	4.608,00	100
20179	SBS 01 356	4.700,00	100
20180	SBS 01 407	7.006,00	100
20181	SBS 01 508	7.386,00	100
20182	SBS 01 610	7.738,00	100
20183	SBS 01 712	12.226,00	100
20184	SBS 01 813	12.636,00	100

item number	designation	price Euro	price per
20161	SBR 05 115	4.092,00	100
20162	SBR 05 140	4.274,00	100
20163	SBR 05 169	4.456,00	100
20164	SBR 05 220	4.802,00	100
20165	SBR 05 273	7.658,00	100
20166	SBR 05 324	8.186,00	100
20167	SBR 05 356	8.368,00	100
20168	SBR 05 407	8.912,00	100
20169	SBR 05 508	10.166,00	100
20170	SBR 05 610	21.506,00	100
20171	SBR 05 712	23.470,00	100
20172	SBR 05 813	25.600,00	100

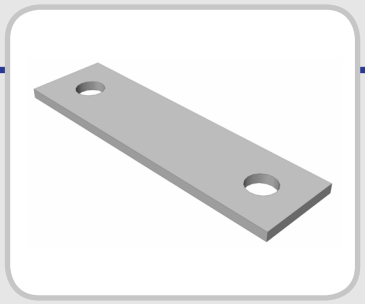

pipe underlay type RU for RB DIN 3570-A DN 15 - 500

polyethylene PEHD

product group discount: 2260

item number	designation	price Euro	price per
60004	RU PEHD 34 for RB DN 15	164,00	100
60005	RU PEHD 40 for RB DN 20	164,00	100
60006	RU PEHD 48 for RB DN 25	164,00	100
60007	RU PEHD 56 for RB DN 32	164,00	100
60008	RU PEHD 62 for RB DN 40	164,00	100
60009	RU PEHD 76 for RB DN 50	200,00	100
60010	RU PEHD 94 for RB DN 65	200,00	100
60011	RU PEHD 106 for RB DN 80	200,00	100
60012	RU PEHD 136 for RB DN 100	248,00	100
60013	RU PEHD 164 for RB DN 125	264,00	100
60014	RU PEHD 192 for RB DN 150	280,00	100
60015	RU PEHD 248 for RB DN 200	346,00	100
60016	RU PEHD 302 for RB DN 250	364,00	100
60017	RU PEHD 352 for RB DN 300	412,00	100
60018	RU PEHD 402 for RB DN 350	480,00	100
60019	RU PEHD 452 for RB DN 400	512,00	100
60020	RU PEHD 554 for RB DN 500	566,00	100

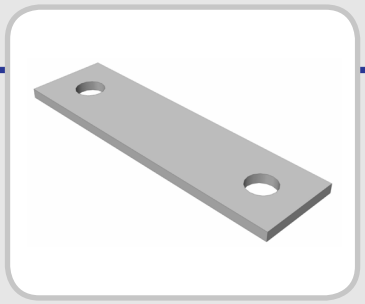

pipe underlay type RU for RB DIN 3570-A DN 15 - 500

1.4301 All prices without alloy surcharge.
product group discount: 2262
1.4571 All prices without alloy surcharge.
product group discount: 2264

item number	designation	price Euro	price per
60021	RU 05 34 for RB DN 15	280,00	100
60022	RU 05 40 for RB DN 20	280,00	100
60023	RU 05 48 for RB DN 25	298,00	100
60024	RU 05 56 for RB DN 32	298,00	100
60025	RU 05 62 for RB DN 40	298,00	100
60026	RU 05 76 for RB DN 50	428,00	100
60027	RU 05 94 for RB DN 65	462,00	100
60028	RU 05 106 for RB DN 80	494,00	100
60029	RU 05 136 for RB DN 100	610,00	100
60030	RU 05 164 for RB DN 125	694,00	100
60031	RU 05 192 for RB DN 150	742,00	100
60032	RU 05 248 for RB DN 200	1.402,00	100
60033	RU 05 302 for RB DN 250	1.668,00	100
60034	RU 05 352 for RB DN 300	1.832,00	100
60035	RU 05 402 for RB DN 350	2.294,00	100
60036	RU 05 452 for RB DN 400	2.542,00	100
60037	RU 05 554 for RB DN 500	3.002,00	100

item number	designation	price Euro	price per
60203	RU 06 34 for RB DN 15	289,00	100
60204	RU 06 40 for RB DN 20	280,00	100
60205	RU 06 48 for RB DN 25	309,00	100
60206	RU 06 56 for RB DN 32	310,00	100
60207	RU 06 62 for RB DN 40	311,00	100
60208	RU 06 76 for RB DN 50	443,00	100
60209	RU 06 94 for RB DN 65	480,00	100
60210	RU 06 106 for RB DN 80	513,00	100
60211	RU 06 136 for RB DN 100	642,00	100
60212	RU 06 164 for RB DN 125	731,00	100
60213	RU 06 192 for RB DN 150	784,00	100
60214	RU 06 248 for RB DN 200	1.484,00	100
60215	RU 06 302 for RB DN 250	1.770,00	100
60216	RU 06 352 for RB DN 300	1.947,00	100
60217	RU 06 402 for RB DN 350	2.445,00	100
60218	RU 06 452 for RB DN 400	2.713,00	100
60219	RU 06 554 for RB DN 500	3.212,00	100

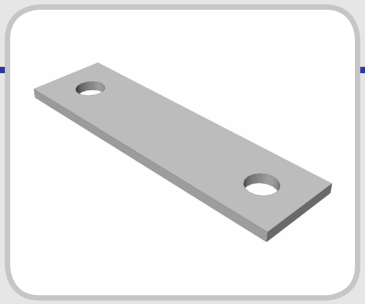

pipe underlay type RUL for RBL similar to DIN 3570-A DN 15 - 500
polyethylene PEHD
product group discount: 2261

item number	designation	price Euro	price per
60038	RUL PEHD 35 for RBL DN 15	164,00	100
60039	RUL PEHD 40 for RBL DN 20	164,00	100
60040	RUL PEHD 48 for RBL DN 25	164,00	100
60041	RUL PEHD 56 for RBL DN 32	164,00	100
60042	RUL PEHD 62 for RBL DN 40	164,00	100
60089	RUL PEHD 68 for RBL DN 50 for D = 53 mm	200,00	100
60043	RUL PEHD 76 for RBL DN 50	200,00	100
60090	RUL PEHD 82 for RBL DN 65 for D = 68 mm	200,00	100
60044	RUL PEHD 94 for RBL DN 65	200,00	100
60091	RUL PEHD 98 for RBL DN 80 for D = 83 mm	200,00	100
60045	RUL PEHD 106 for RBL DN 80	200,00	100
60092	RUL PEHD 130 for RBL DN 100 for D = 104/108 mm	248,00	100
60046	RUL PEHD 136 for RBL DN 100	248,00	100
60093	RUL PEHD 152 for RBL DN 125 for D = 129/133 mm	264,00	100
60047	RUL PEHD 164 for RBL DN 125	264,00	100
60094	RUL PEHD 176 for RBL DN 150 for D = 154/159 mm	280,00	100
60048	RUL PEHD 188 for RBL DN 150	280,00	100
60095	RUL PEHD 231 for RBL DN 200 for D = 204/207 mm	346,00	100
60049	RUL PEHD 244 for RBL DN 200	346,00	100
60096	RUL PEHD 281 for RBL DN 250 for D = 254/257 mm	364,00	100
60050	RUL PEHD 298 for RBL DN 250	364,00	100
60097	RUL PEHD 332 for RBL DN 300 for D = 304/308 mm	412,00	100
60051	RUL PEHD 348 for RBL DN 300	412,00	100
60052	RUL PEHD 394 for RBL DN 350	480,00	100
60053	RUL PEHD 448 for RBL DN 400	512,00	100
60054	RUL PEHD 550 for RBL DN 500	566,00	100

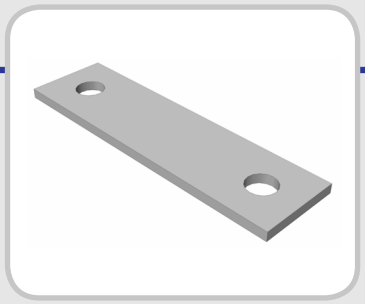

pipe underlay type RUL for RBL similar to DIN 3570-A DN 15 - 500

1.4301 All prices without alloy surcharge.
product group discount: 2263
1.4571 All prices without alloy surcharge.
product group discount: 2265

item number	designation	price Euro	price per	item number	designation	price Euro	price per
60055	RUL 05 35 for RBL DN 15	280,00	100	60220	RUL 06 35 for RBL DN 15	291,00	100
60056	RUL 05 40 for RBL DN 20	280,00	100	60221	RUL 06 40 for RBL DN 20	292,00	100
60057	RUL 05 48 for RBL DN 25	298,00	100	60222	RUL 06 48 for RBL DN 25	312,00	100
60058	RUL 05 56 for RBL DN 32	298,00	100	60223	RUL 06 56 for RBL DN 32	313,00	100
60059	RUL 05 62 for RBL DN 40	298,00	100	60224	RUL 06 62 for RBL DN 40	314,00	100
60079	RUL 05 68 for RBL DN 50 for D = 53 mm	428,00	100	60225	RUL 06 68 for RBL DN 50 for D = 53 mm	447,00	100
60060	RUL 05 76 for RBL DN 50	428,00	100	60226	RUL 06 76 for RBL DN 50	447,00	100
60080	RUL 05 82 for RBL DN 65 for D = 68 mm	462,00	100	60227	RUL 06 82 for RBL DN 65 for D = 68 mm	484,00	100
60061	RUL 05 94 for RBL DN 65	462,00	100	60228	RUL 06 94 for RBL DN 65	484,00	100
60081	RUL 05 98 for RBL DN 80 for D = 83 mm	494,00	100	60229	RUL 06 98 for RBL DN 80 for D = 83 mm	518,00	100
60062	RUL 05 106 for RBL DN 80	494,00	100	60230	RUL 06 106 for RBL DN 80	519,00	100
60082	RUL 05 130 for RBL DN 100 for D = 104/108 mm	610,00	100	60231	RUL 06 130 for RBL DN 100 for D = 104/108 mm	659,00	100
60063	RUL 05 136 for RBL DN 100	610,00	100	60232	RUL 06 136 for RBL DN 100	659,00	100
60083	RUL 05 152 for RBL DN 125 for D = 129/133 mm	694,00	100	60233	RUL 06 152 for RBL DN 125 for D = 129/133 mm	751,00	100
60064	RUL 05 164 for RBL DN 125	694,00	100	60234	RUL 06 164 for RBL DN 125	752,00	100
60084	RUL 05 176 for RBL DN 150 for D = 154/159 mm	742,00	100	60235	RUL 06 176 for RBL DN 150 for D = 154/159 mm	806,00	100
60065	RUL 05 188 for RBL DN 150	742,00	100	60236	RUL 06 188 for RBL DN 150	806,00	100
60085	RUL 05 231 for RBL DN 200 for D = 204/207 mm	1.402,00	100	60237	RUL 06 231 for RBL DN 200 f or D = 204/207 mm	1.507,00	100
60066	RUL 05 244 for RBL DN 200	1.402,00	100	60238	RUL 06 244 for RBL DN 200	1.507,00	100
60086	RUL 05 281 for RBL DN 250 for D = 254/257 mm	1.668,00	100	60239	RUL 06 281 for RBL DN 250 for D = 254/257 mm	1.792,00	100
60067	RUL 05 298 for RBL DN 250	1.668,00	100	60240	RUL 06 298 for RBL DN 250	1.795,00	100
60087	RUL 05 332 for RBL DN 300 for D = 304/308 mm	1.832,00	100	60241	RUL 06 332 for RBL DN 300 for D = 304/308 mm	1.974,00	100
60068	RUL 05 348 for RBL DN 300	1.832,00	100	60242	RUL 06 348 for RBL DN 300	1.980,00	100
60069	RUL 05 394 for RBL DN 350	2.294,00	100	60243	RUL 06 394 for RBL DN 350	2.453,00	100
60070	RUL 05 448 for RBL DN 400	2.542,00	100	60244	RUL 06 448 for RBL DN 400	2.761,00	100
60071	RUL 05 550 for RBL DN 500	3.002,00	100	60245	RUL 06 550 for RBL DN 500	3.265,00	100

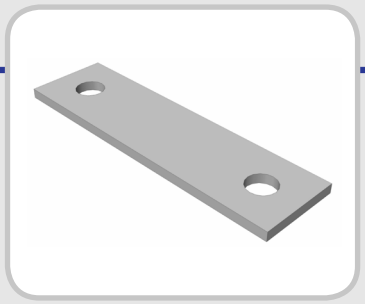

pipe underlay type RUS (for SBS) DN 100 - 800

polyethylene PEHD

product group discount: 2266

pipe underlay type RUR (for SBR) DN 100 - 800

1.4301 All prices without alloy surcharge.

product group discount: 2267

item number	designation	price Euro	price per	item number	designation	price Euro	price per
60246	RUS PEHD 135 for SBS DN 100	248,00	100	60260	RUR 05 141 for SBR DN 100	502,00	100
60247	RUS PEHD 161 for SBS DN 125	264,00	100	60261	RUR 05 167 for SBR DN 125	510,00	100
60248	RUS PEHD 192 for SBS DN 150	280,00	100	60262	RUR 05 195 for SBR DN 150	550,00	100
60249	RUS PEHD 244 for SBS DN 200	346,00	100	60263	RUR 05 246 for SBR DN 200	565,00	100
60250	RUS PEHD 298 for SBS DN 250	364,00	100	60264	RUR 05 304 for SBR DN 250	750,00	100
60251	RUS PEHD 352 for SBS DN 300	412,00	100	60265	RUR 05 355 for SBR DN 300	765,00	100
60252	RUS PEHD 398 for SBS DN 350	480,00	100	60266	RUR 05 387 for SBR DN 350	772,00	100
60253	RUS PEHD 448 for SBS DN 400	512,00	100	60267	RUR 05 437 for SBR DN 400	790,00	100
60254	RUS PEHD 550 for SBS DN 500	566,00	100	60268	RUR 05 539 for SBR DN 500	825,00	100
60255	RUS PEHD 659 for SBS DN 600	735,00	100	60269	RUR 05 651 for SBR DN 600	1.500,00	100
60256	RUS PEHD 759 for SBS DN 700	825,00	100	60270	RUR 05 752 for SBR DN 700	1.580,00	100
60257	RUS PEHD 859 for SBS DN 800	918,00	100	60271	RUR 05 854 for SBR DN 800	1.620,00	100

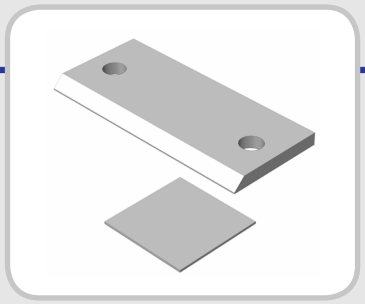

welding plate type ALRB DN 15 - 250

S235JR

product group discount: 2270

welding plate type ALRBL DN 15 - 250

S235JR

product group discount: 2271

fitted plate type UB DN 15 - 250

1.4571 All prices without alloy surcharge.

product group discount: 2272

item number	designation	price Euro	price per
95815	ALRB 01 15	222,00	100
95816	ALRB 01 20	222,00	100
95817	ALRB 01 25	258,00	100
95818	ALRB 01 32	276,00	100
95819	ALRB 01 40	294,00	100
95820	ALRB 01 50	450,00	100
95821	ALRB 01 65	504,00	100
95822	ALRB 01 80	534,00	100
95823	ALRB 01 100	624,00	100
95824	ALRB 01 125	678,00	100
95825	ALRB 01 150	792,00	100
95826	ALRB 01 200	1.494,00	100
95827	ALRB 01 250	1.704,00	100

item number	designation	price Euro	price per
95839	ALRBL 01 15	222,00	100
95840	ALRBL 01 20	222,00	100
95841	ALRBL 01 25	258,00	100
95842	ALRBL 01 32	276,00	100
95843	ALRBL 01 40	294,00	100
95844	ALRBL 01 50	450,00	100
95845	ALRBL 01 65	504,00	100
95846	ALRBL 01 80	534,00	100
95847	ALRBL 01 100	624,00	100
95848	ALRBL 01 125	678,00	100
95849	ALRBL 01 150	792,00	100
95850	ALRBL 01 200	1.494,00	100
95851	ALRBL 01 250	1.704,00	100

item number	designation	price Euro	price per
95852	UB 06 15	128,00	100
95853	UB 06 20	128,00	100
95854	UB 06 25	128,00	100
95855	UB 06 32	128,00	100
95856	UB 06 40	128,00	100
95857	UB 06 50	128,00	100
95858	UB 06 65	240,00	100
95859	UB 06 80	240,00	100
95860	UB 06 100	240,00	100
95861	UB 06 125	240,00	100
95862	UB 06 150	360,00	100
95863	UB 06 200	360,00	100
95864	UB 06 250	360,00	100

ROHRBEFESTIGUNGEN

Hammerschmid GmbH

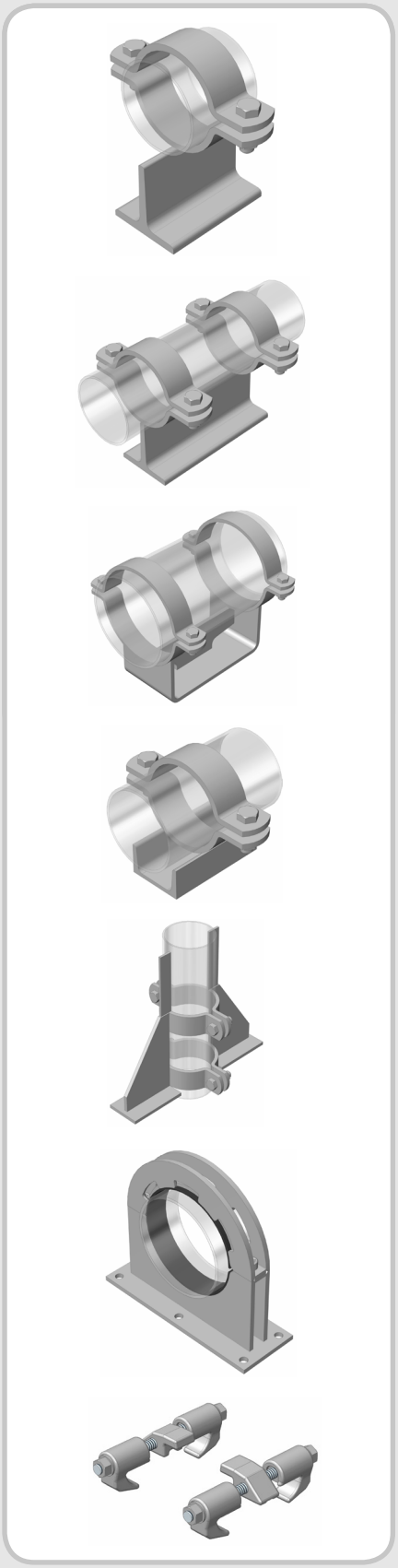

pipe carriages
support for vertical piping
guide angles
slide plates
cold insulation
beam clamps

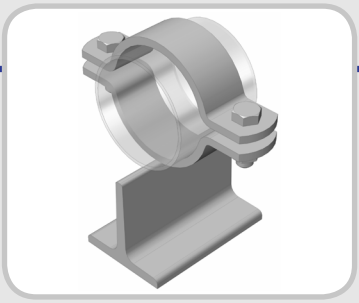

pipe carriage

slide support (type GL)
guide support (type FL)
fix support (type FP)

Pipe carriages are used as slide, guide and fix support. They serve for the feed-in of the pipe and facilitate the fitting into almost all positions whereby the horizontal assembly is the preferred application. Depending on the height of the pipe carriages there is the possibility of insulating the pipe, if necessary. For cold-insulated pipes hardwood shims can be used.

With a **slide support** the pipe has the possibility to move freely around all axes.
With a **guide support** angles are welded or mounted by the customer onto the substructure. By doing so a so-called controlled force guiding is created (the pipe can only move along the pipe axis). In order to reduce the friction coefficient between the pipe carriage and the substructure a slide plate of PTFE or similar can be mounted, if necessary together with a stainless sliding base.
A **fix support** is welded or fixed by the customer to the substructure. In addition we recommend welding connectors (made of raw material) to the pipe next to the pipe carriage in order to reduce a possible sliding through of the pipe.

Execution:
Pipe carriages are constructed from T-profiles, angle or sheet metal constructions. The used pipe clamp is diverted from DIN 3567-A. All parts are designed in such a manner so that an all-around welding with protective gas is guaranteed. The weld nozzles are removed carefully so that no problem occurs with subsequent corrosion protection. Production is possible with all materials listed below as well as with all corrosion protection.
For the assembly of guide supports the **guide angles** from S235JR or 1.4301 are welded by the customer to the pipe carriage on the substructure with a gap of approx. 2 mm and by doing so the pipe carriage has the possibility moving in axial direction.
Beam clamps are forged from S235JR, hot dip galvanized and serve as a guide and lift lock for the pipe carriage on different beam types. Assembly can only be carried out using a clamp joint which means that the secondary support must not be drilled or welded.
Cold insulation (hardwood shim) is made of impregnated hardwood. This can either be mounted between the medium pipe and the pipe clamp.

In order to reduce the friction coefficient from the pipe carriage to the substructure a so-called slide support can be used. This consists of a steel box from S235JR with inserted teflon slide plates. This steel box can be welded or mounted to the substructure depending on the possibility (friction coefficient steel on steel 0,5 µ | friction coefficient steel on teflon 0,2 µ). This friction coefficient can be further reduced significantly by using a stainless sliding base. This can either be mounted on the substructure or onto the pipe carriage (friction coefficient stainless on teflon 0,05 µ).

material:

material	internal material specification	max. operation temperature	screw quality	nut quality
S235 JRG2 (S235JR)	01	300 °C	8.8	8
P265 GH (H2)	02	450 °C	Ck35	Ck35
16Mo3 (15Mo3)	03	530 °C	24CrMo5	Ck35
13CrMo4-5 (13CrMo44)	04	560 °C	21CrMoV57	21CrMoV57
1.4301 (A2)	05		A2	A2
1.4571 (A4)	06		A4	A4

norms: see attachment 4.0 and 4.1

applications for insulated pipes DN 15 - 150

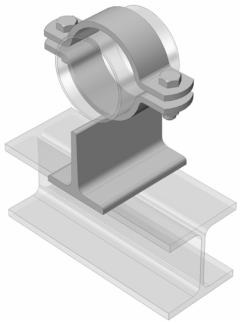

slide support
Pipe carriage of T-profile with a welded pipe clamp. The pipe carriage is only placed on the substructure. A movement in all directions is therefore possible.

We manufacture this type of construction from DN 15 to DN 150 in all heights.

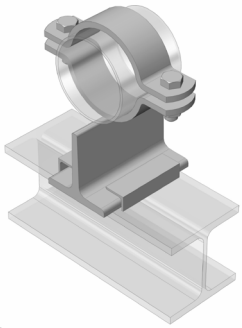

guide support
Pipe carriage of T-profile with a welded pipe clamp. The pipe carriage is only placed on the substructure. The supplied guide angles or guide brackets are welded by the customer and by doing so only a movement in the axial direction is possible.

We manufacture this type of construction from DN 15 to DN 150 in all heights.

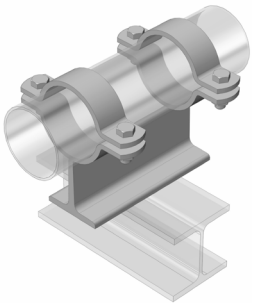

fix support
Pipe carriage of T-profile with a welded pipe clamp. The pipe carriage is welded or bolted to the substructure. Therefore no movement of the pipe is possible. If necessary a bracket can be welded onto the pipe beside the clamp to avoid a slipping through of the pipe.

We manufacture this type of construction from DN 15 to DN 150 in all heights.

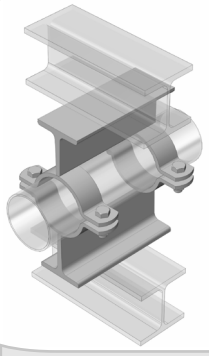

pipe carriage “double guided“
We manufacture this type of construction from DN 15 to DN 150 in all heights.

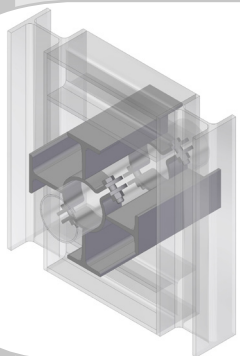

pipe carriage “multilaterally guided“
In frame construction by the customer.
We manufacture this type of construction from DN 15 to DN 150 in all heights.

applications for insulated pipes DN 200 - 1000

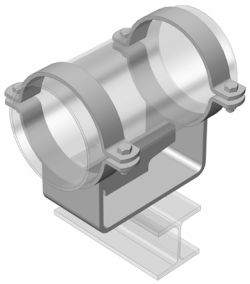

slide support
Pipe carriage of sheet construction with two welded pipe clamps. The pipe carriage is only placed on the substructure. A movement in all directions is therefore possible.

We manufacture this type of construction from DN 200 to DN 1000 in all heights.

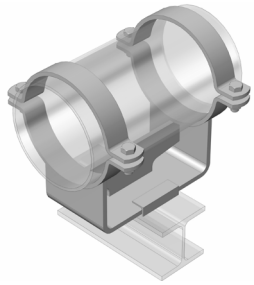

guide support
Pipe carriage of sheet construction with two welded pipe clamps. The pipe carriage is only placed on the substructure. The supplied guide angles or guide brackets are welded by the customer and by doing so only a movement in the axial direction is possible.

We manufacture this type of construction from DN 200 to DN 1000 in all heights.

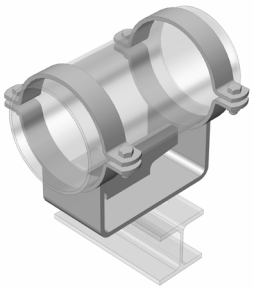

fix support
Pipe carriage of sheet construction with two welded pipe clamps. The pipe carriage is welded or bolted to the substructure. Therefore no movement of the pipe is possible. If necessary a bracket can be welded onto the pipe beside the clamp to avoid a slipping through of the pipe.

We manufacture this type of construction from DN 200 to DN 1000 in all heights.

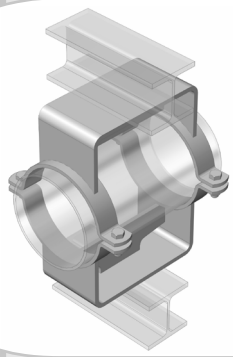

pipe carriage “double guided“
We manufacture this type of construction from DN 200 to DN 1000 in all heights.

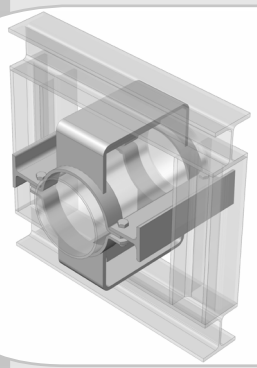

pipe carriage “multilaterally guided“
In frame construction by the customer.
We manufacture this type of construction from DN 200 to DN 1000 in all heights.

applications for non-insulated pipes DN 50 - 1000

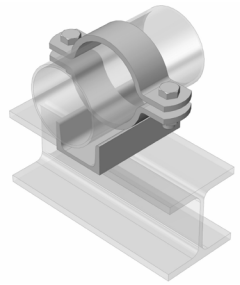

slide support
Pipe carriage of U-profile with a welded pipe clamp. The pipe carriage is only placed on the substructure. A movement in all directions is therefore possible. This pipe carriage is perfect for non-insulated pipes because of the low height.

We manufacture this type of construction from DN 50 to DN 1000.

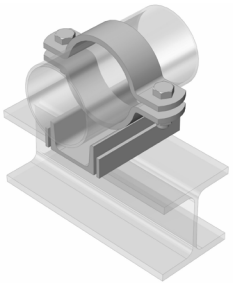

guide support
Pipe carriage of U-profile with a welded pipe clamp. The pipe carriage is only placed on the substructure. The supplied guide rails are welded by the customer and by doing so only a movement in the axial direction is possible. This pipe carriage is perfect for non-insulated pipes because of the low height.

We manufacture this type of construction from DN 50 to DN 1000.

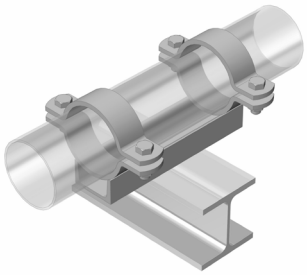

fix support
Pipe carriage of U-profile with a welded pipe clamp. The pipe carriage is welded or bolted to the substructure. Therefore no movement of the pipe is possible. This pipe carriage is perfect for non-insulated pipes because of the low height.

We manufacture this type of construction from DN 50 to DN 1000.

applications for non-insulated pipes DN 200 - 1000

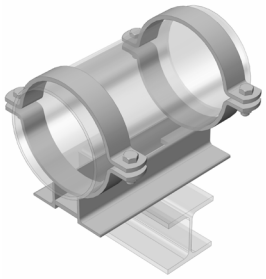

slide support
Pipe carriage of angle construction with two welded pipe clamps. The pipe carriage is only placed on the substructure. A movement in all directions is therefore possible.

We manufacture this type of construction from DN 200 to DN 1000.

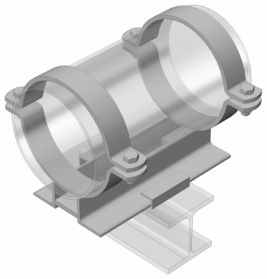

guide support
Pipe carriage of angle construction with two welded pipe clamps. The pipe carriage is only placed on the substructure. The supplied guide angles or guide brackets are welded by the customer and by doing so only a movement in the axial direction is possible.

We manufacture this type of construction from DN 200 to DN 1000.

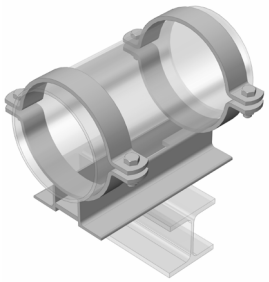

fix support
Pipe carriage of angle construction with two welded pipe clamps. The pipe carriage is welded or bolted to the substructure. Therefore no movement of the pipe is possible. If necessary a bracket can be welded onto the pipe beside the clamp to avoid a slipping through of the pipe.

We manufacture this type of construction from DN 200 to DN 1000.

applications for vertical laid pipes DN 15 - 1000

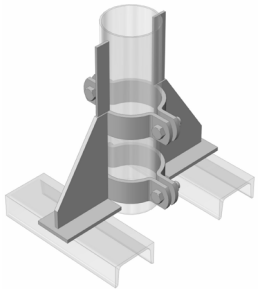

support for vertical piping DN 15 - 175
This type of construction is only used for vertical laid pipes. The supplied fix support brackets of material S235JR have to be welded all around as you can see in the drawing (page 3.1.9).
Attention: only brackets of the material S235JR are supplied. Is the pipe material of another material than S235JR the fix support brackets have to be provided by the building contractor.

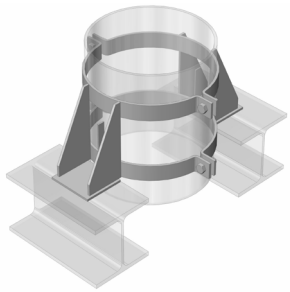

support for vertical piping DN 200 - 1000
This type of construction is only used for vertical laid pipes. The supplied fix support brackets of material S235JR have to be welded all around as you can see in the drawing (page 3.1.9).
Attention: only brackets of the material S235JR are supplied. Is the pipe material of another material than S235JR the fix support brackets have to be provided by the building contractor.

applications for non-insulated pipes DN 300 - 1000

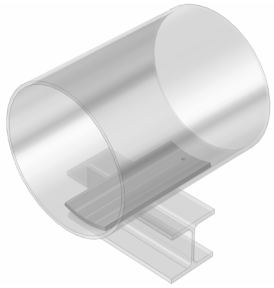

pipe slide - slide support
Serves as a support for the pipe. The pipe is welded by the customer with the pipe slide. A movement in all directions is possible.

We manufacture this type of construction from DN 300 to DN 1000.

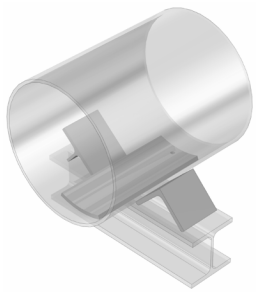

pipe slide - guide support
Serves as a support for the pipe. The pipe is welded by the customer with the pipe slide. The supplied guide angles are welded by the customer and therefore only a movement in the axial direction is possible.
Until DN 700 consisting of 2 angle profiles, from DN 800 consisting of 1/2 IPB beams.

We manufacture this type of construction from DN 300 to DN 1000.

applications for beam clamps

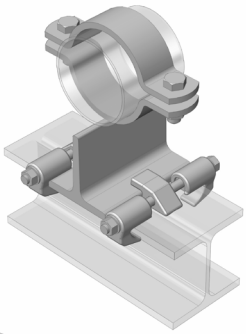

beam clamps for HEA/HEB beams
The beam clamps are mounted with the aid of the supplied threaded rods. At the mounting you have to consider that the beam clamps have to show a gap of 2-5 mm in order to enable an axial movement. The big benefit compared to the guide angles is the easy assembling without executing welding or drilling works.

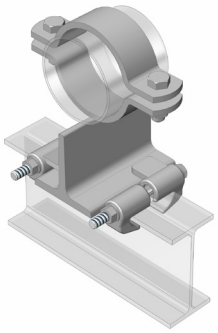

beam clamps for IPE beams
The beam clamps are mounted with the aid of the supplied threaded rods. At the mounting you have to consider that the beam clamps have to show a gap of 2-5 mm in order to enable an axial movement. The big benefit compared to the guide angles is the easy assembling without executing welding or drilling works.

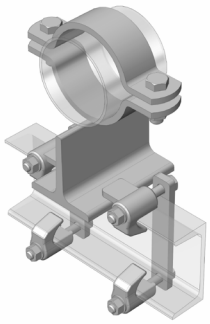

beam clamps for UNP beams
The beam clamps are mounted with the aid of the supplied threaded rods. At the mounting you have to consider that the beam clamps have to show a gap of 2-5 mm in order to enable an axial movement. The big benefit compared to the guide angles is the easy assembling without executing welding or drilling works.

After-images show the universal use of our beam clamp system.

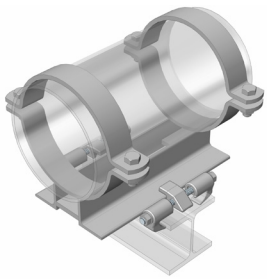

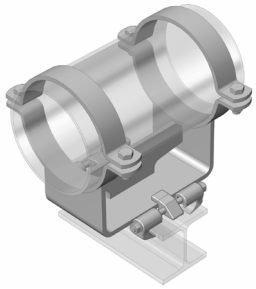

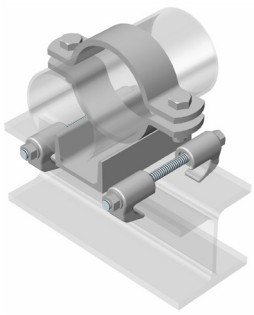

applications for PE pipes DN 50 - 600

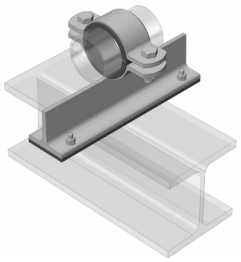

slide support DN 50 - 100
Pipe carriage of T-profile with a welded pipe clamp (similar to DIN 3567-A) and an EPDM-inlay to avoid a contact with the pipe. The pipe carriage has mounted a PE-HD slide plate in order to reduce the frictional force of the substructure.

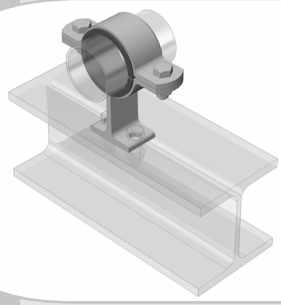

guide support DN 50 - 100
Pipe carriage of T-profile with a welded null pipe clamp and PE-HD inlay. This inlay protects the pipe from abrasion forces between the pipe carriage and the PE pipe. Furthermore this will allow axial movement of the pipe. Mounting either by the customer through welding it to the base or by using the two existing screw holes.

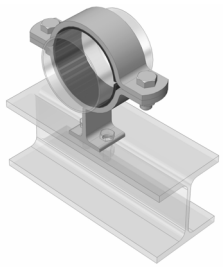

fix support DN 50 - 100
Pipe carriage of T-profile with a welded null pipe clamp and PE-HD inlay. The inlay guarantees an optimal clamp from the welded sleeve without damaging the PE pipe. Mounting either by the customer through welding it to the base or by using the two existing screw holes.

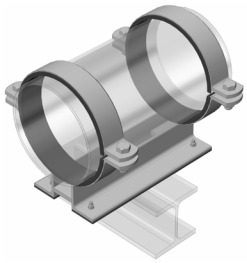

slide support DN 125 - 600
Pipe carriage of 2 angle constructions with two welded pipe clamps (similar to DIN 3567-A) and an EPDM-inlay to avoid a contact with the pipe. The pipe carriage has mounted a PE-HD slide plate in order to reduce the frictional force of the substructure.

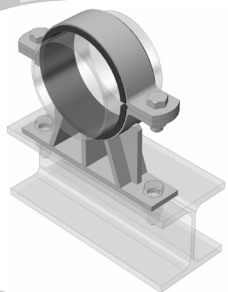

guide support DN 125 - 600
Pipe carriage of T-profile with a welded null pipe clamp and PE-HD inlay. The inlay guarantees an optimal clamp from the welded sleeve without damaging the PE pipe. Mounting either by the customer through welding it to the base or by using the two existing screw holes.

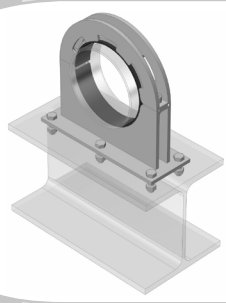

fix support DN 125 - 600
Pipe carriage made of using a sheet metal with EPDM-inlay. The inlay guarantees an optimal clamp from the welded sleeve without damaging the PE pipe. Mounting either by the customer through welding it to the base or by using the two existing screw holes.

pipe carriage

DN 15 - 150
slide support type GL
guide support type FL
fix support type FP

type GL, FL

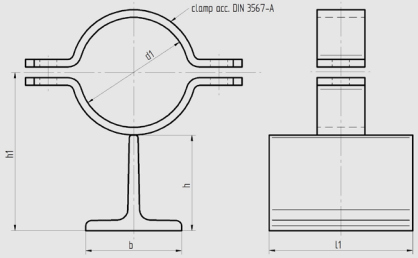

type FP

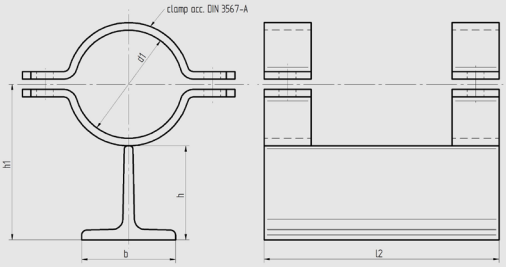

order example

type	material see 3.0.1	pipe diameter d1	h	extra surface protection
GL	01	22	100	

height 100

							weight kg/pc.			1 clamp			2 clamps		
d1	nominal diameter	profile bxhxs	h	h1	l1	l2	GL	FL	FP	Fx (kN)	Fy (kN)	Fz (kN)	Fx (kN)	Fy (kN)	Fz (kN)
22	15	100x100x11	100	116	150	250	2,74	3,13	4,67	1,7	1,7	2,4	3,4	3,4	4,8
27	20	100x100x11	100	118	150	250	2,76	3,15	4,71	1,4	1,4	2,4	2,8	2,8	4,8
34	25	100x100x11	100	122	150	250	2,78	3,17	4,75	1,2	1,2	2,4	2,4	2,4	4,8
43	32	100x100x11	100	126	150	250	2,82	3,21	4,83	0,9	0,9	2,4	1,8	1,8	4,8
49	40	100x100x11	100	129	150	250	2,84	3,23	4,87	0,8	0,8	2,4	1,6	1,6	4,8
53	50	100x100x11	100	132	150	250	3,09	3,48	5,37	1,5	1,5	4,0	3,0	3,0	8,0
61	50	100x100x11	100	136	150	250	3,17	3,56	5,53	1,3	1,3	4,0	2,6	2,6	8,0
68	65	100x100x11	100	140	150	250	3,22	3,61	5,63	1,2	1,2	4,0	2,4	2,4	8,0
77	65	100x100x11	100	144	150	250	3,25	3,64	5,69	1,0	1,0	4,0	2,0	2,0	8,0
83	80	100x100x11	100	147	150	250	3,32	3,71	5,83	1,0	1,0	4,0	2,0	2,0	8,0
89	80	100x100x11	100	150	150	250	3,34	3,73	5,87	0,9	0,9	4,0	1,8	1,8	8,0
108	100	100x100x11	100	162	150	250	4,34	4,73	7,87	1,6	1,6	6,0	3,2	3,2	12,0
115	100	100x100x11	100	165	150	250	4,38	4,77	7,95	1,5	1,5	6,0	3,0	3,0	12,0
133	125	100x100x11	100	174	150	250	4,53	4,92	8,25	1,3	1,3	6,0	2,6	2,6	12,0
140	125	100x100x11	100	178	150	250	4,58	4,97	8,35	1,2	1,2	6,0	2,4	2,4	12,0
159	150	100x100x11	100	187	150	250	4,75	5,14	8,69	1,1	1,1	6,0	2,2	2,2	12,0
169	150	100x100x11	100	192	150	250	4,83	5,22	8,85	1,0	1,0	6,0	2,0	2,0	12,0

Any other height or a tilting of the pipe clamp axis is possible.

Actual measures of the pipe supports depend on the individual profile tolerance.
Basis for the calculation of the load values can be found on page 2.0, 2.1 and 2.2. Subject to technical modifications.

pipe carriage

DN 15 - 150
slide support type GL
guide support type FL
fix support type FP

type GL, FL

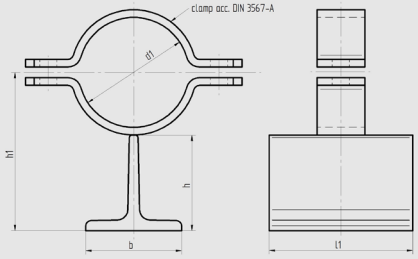

type FP

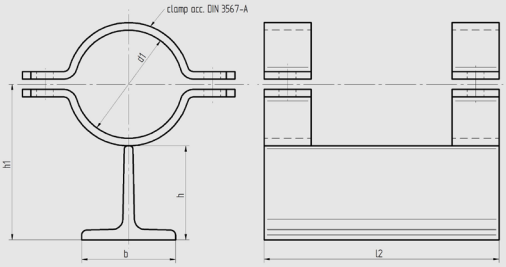

order example

type	material see 3.0.1	pipe diameter d1	h	extra surface protection
GL	01	22	80	

height 80

							weight kg/pc.			1 clamp			2 clamps		
d1	nominal diameter	profile bxhxs	h	h1	l1	l2	GL	FL	FP	Fx (kN)	Fy (kN)	Fz (kN)	Fx (kN)	Fy (kN)	Fz (kN)
22	15	80x80x9	80	96	150	250	1,89	2,27	3,24	1,7	1,7	2,4	3,4	3,4	4,8
27	20	80x80x9	80	98	150	250	1,91	2,29	3,28	1,4	1,4	2,4	2,8	2,8	4,8
34	25	80x80x9	80	102	150	250	1,93	2,31	3,32	1,2	1,2	2,4	2,4	2,4	4,8
43	32	80x80x9	80	106	150	250	1,97	2,35	3,40	0,9	0,9	2,4	1,8	1,8	4,8
49	40	80x80x9	80	109	150	250	1,99	2,37	3,44	0,8	0,8	2,4	1,6	1,6	4,8
53	50	80x80x9	80	112	150	250	2,24	2,62	3,94	1,5	1,5	4,0	3,0	3,0	8,0
61	50	80x80x9	80	116	150	250	2,32	2,7	4,10	1,3	1,3	4,0	2,6	2,6	8,0
68	65	80x80x9	80	120	150	250	2,37	2,75	4,20	1,2	1,2	4,0	2,4	2,4	8,0
77	65	80x80x9	80	124	150	250	2,40	2,78	4,26	1,0	1,0	4,0	2,0	2,0	8,0
83	80	80x80x9	80	127	150	250	2,47	2,85	4,40	1,0	1,0	4,0	2,0	2,0	8,0
89	80	80x80x9	80	130	150	250	2,49	2,87	4,44	0,9	0,9	4,0	1,8	1,8	8,0

height 60

							weight kg/pc.			1 clamp			2 clamps		
d1	nominal diameter	profile bxhxs	h	h1	l1	l2	GL	FL	FP	Fx (kN)	Fy (kN)	Fz (kN)	Fx (kN)	Fy (kN)	Fz (kN)
22	15	60x60x7	60	76	150	250	1,21	1,60	2,12	1,7	1,7	2,4	3,4	3,4	4,8
27	20	60x60x7	60	78	150	250	1,23	1,62	2,16	1,4	1,4	2,4	2,8	2,8	4,8
34	25	60x60x7	60	82	150	250	1,25	1,64	2,20	1,2	1,2	2,4	2,4	2,4	4,8
43	32	60x60x7	60	86	150	250	1,29	1,68	2,28	0,9	0,9	2,4	1,8	1,8	4,8
49	40	60x60x7	60	89	150	250	1,31	1,70	2,32	0,8	0,8	2,4	1,6	1,6	4,8
53	50	60x60x7	60	92	150	250	1,56	1,95	2,82	1,5	1,5	4,0	3,0	3,0	8,0
61	50	60x60x7	60	96	150	250	1,64	2,03	2,98	1,3	1,3	4,0	2,6	2,6	8,0

Any other height or a tilting of the pipe clamp axis is possible.

Actual measures of the pipe supports depend on the individual profile tolerance.
Basis for the calculation of the load values can be found on page 2.0, 2.1 and 2.2. Subject to technical modifications.

pipe carriage

DN 200 - 350
slide support type GL
guide support type FL
fix support type FP

type GL, FL, FP

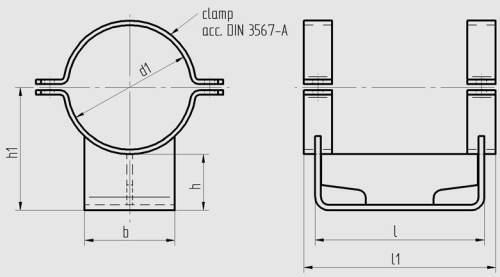

order example

type	material see 3.0.1	pipe diameter d1	h	extra surface protection
GL	01	204	100	

height 100

weight kg/pc.

d1	nominal diameter	h	h1	l1	l	b	GL	FL	FP	Fx (kN)	Fy (kN)	Fz (kN)
204	200	100	210	340	300	160	14,40	14,79	14,40	6,0	6,0	24,0
220	200	100	218	340	300	160	14,72	15,11	14,72	6,0	6,0	24,0
254	250	100	235	340	300	200	19,16	19,55	19,16	6,0	6,0	30,0
273	250	100	244	340	300	200	19,65	20,04	19,65	6,0	6,0	30,0
305	300	100	260	340	300	200	20,39	20,78	20,39	6,0	6,0	30,0
324	300	100	270	340	300	200	20,87	21,26	20,87	6,0	6,0	30,0
356	350	100	286	340	300	240	23,63	24,02	23,63	6,0	6,0	36,0

height 160

weight kg/pc.

d1	nominal diameter	h	h1	l1	l	b	GL	FL	FP	Fx (kN)	Fy (kN)	Fz (kN)
204	200	160	270	340	300	200	19,62	20,01	19,62	6,0	6,0	28,0
220	200	160	278	340	300	200	20,00	20,39	20,00	6,0	6,0	28,0
254	250	160	295	340	300	200	22,55	22,94	22,55	6,0	6,0	28,0
273	250	160	304	340	300	200	22,85	23,24	22,85	6,0	6,0	28,0
305	300	160	320	340	300	240	25,41	25,80	25,41	6,0	6,0	33,6
324	300	160	330	340	300	240	26,17	26,56	26,17	6,0	6,0	33,6
356	350	160	346	340	300	260	27,37	27,76	27,37	6,0	6,0	36,4

height 220

weight kg/pc.

d1	nominal diameter	h	h1	l1	l	b	GL	FL	FP	Fx (kN)	Fy (kN)	Fz (kN)
204	200	220	330	340	300	200	26,96	27,35	26,96	6,0	6,0	28,8
220	200	220	338	340	300	200	27,10	27,49	27,10	6,0	6,0	28,8
254	250	220	355	340	300	200	29,44	29,83	29,44	6,0	6,0	28,8
273	250	220	364	340	300	200	29,70	30,09	29,70	6,0	6,0	28,8
305	300	220	380	340	300	240	33,88	34,27	33,88	6,0	6,0	34,6
324	300	220	390	340	300	240	34,36	34,75	34,36	6,0	6,0	34,6
356	350	220	406	340	300	260	36,50	36,89	36,50	6,0	6,0	37,4

Any other height or a tilting of the pipe clamp axis is possible.

Actual measures of the pipe supports depend on the individual profile tolerance.
Basis for the calculation of the load values can be found on page 2.0, 2.1 and 2.2. Subject to technical modifications.

pipe carriage

DN 400 - 1000
slide support type GL
guide support type FL
fix support type FP

type GL, FL, FP

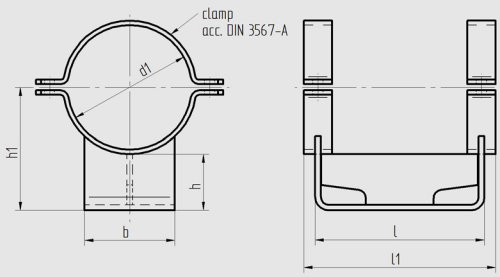

order example

type	material see 3.0.1	pipe diameter d1	h	extra surface protection
GL	01	407	100	

height 100

weight kg/pc.

d1	nominal diameter	h	h1	l1	l	b	GL	FL	FP	Fx (kN)	Fy (kN)	Fz (kN)
407	400	100	313	340	300	300	36,64	37,03	36,64	6,0	4,0	24,0
457	450	100	338	340	300	300	38,40	38,79	38,40	6,0	4,0	24,0
508	500	100	364	340	300	300	39,41	39,80	39,41	6,0	4,0	24,0
610	600	100	415	540	500	400	62,40	62,79	62,40	6,0	4,0	32,0
712	700	100	466	540	500	400	66,20	66,59	66,20	6,0	4,0	32,0
813	800	100	516	740	700	450	78,48	78,87	78,48	6,0	4,0	36,0
915	900	100	567	740	700	450	87,26	87,65	87,26	6,0	4,0	36,0
1016	1000	100	618	740	700	450	91,53	91,92	91,53	6,0	4,0	36,0

height 160

weight kg/pc.

d1	nominal diameter	h	h1	l1	l	b	GL	FL	FP	Fx (kN)	Fy (kN)	Fz (kN)
407	400	160	373	340	300	370	48,40	48,79	48,40	6,0	4,0	35,5
457	450	160	398	340	300	370	49,90	50,29	49,90	6,0	4,0	35,5
508	500	160	424	340	300	370	50,90	51,29	50,90	6,0	4,0	35,5
610	600	160	475	540	500	400	73,00	73,39	73,00	6,0	4,0	38,4
712	700	160	526	540	500	400	77,00	77,39	77,00	6,0	4,0	38,4
813	800	160	576	740	700	450	101,00	101,39	101,00	6,0	4,0	43,2
915	900	160	627	740	700	450	110,20	110,59	110,20	6,0	4,0	43,2
1016	1000	160	678	740	700	450	114,00	114,39	114,00	6,0	4,0	43,2

height 220

weight kg/pc.

d1	nominal diameter	h	h1	l1	l	b	GL	FL	FP	Fx (kN)	Fy (kN)	Fz (kN)
407	400	220	433	340	300	370	56,00	56,39	56,00	6,0	4,0	35,5
457	450	220	458	340	300	370	57,44	57,83	57,44	6,0	4,0	35,5
508	500	220	484	340	300	370	59,50	59,89	59,50	6,0	4,0	35,5
610	600	220	535	540	500	400	84,63	85,02	84,63	6,0	4,0	38,4
712	700	220	586	540	500	400	88,13	88,52	88,13	6,0	4,0	38,4
813	800	220	636	740	700	450	113,26	113,63	113,26	6,0	4,0	43,2
915	900	220	687	740	700	450	121,80	122,19	121,80	6,0	4,0	43,2
1016	1000	220	738	740	700	450	125,00	125,39	125,00	6,0	4,0	43,2

Any other height or a tilting of the pipe clamp axis is possible.

Actual measures of the pipe supports depend on the individual profile tolerance.
Basis for the calculation of the load values can be found on page 2.0, 2.1 and 2.2. Subject to technical modifications.

A-4614 Marchtrenk | Linzer Straße 141 | tel. 0043 7243 / 58 222 | fax 0043 7243 / 58 222 800 | e-mail: office@hammerschmid.at | www.hammerschmid.at

pipe carriage

DN 15 - 150
slide support type GL
guide support type FL
fix support type FP

type GL, FL

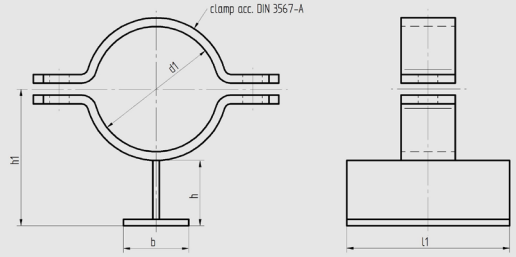

ATTENTION!
Made of rolled or welded profile.
Clamp according to DIN 3567-A

type FP

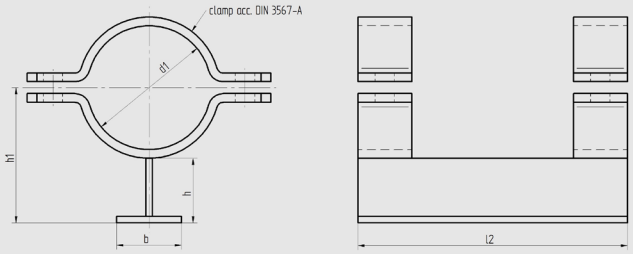

order example

type	material see 3.0.1	pipe diameter d1	h	extra surface protection
GL	05	22	60	

height 60

								weight kg/pc.			1 clamp			2 clamps		
d1	nominal diameter	profile bxhxs	h	h1	l1	l2	GL	FL	FP	Fx (kN)	Fy (kN)	Fz (kN)	Fx (kN)	Fy (kN)	Fz (kN)
22	15	60x60x6	60	76	150	250	1,10	1,49	1,93	1,3	1,3	1,9	2,6	2,6	3,8
27	20	60x60x6	60	78	150	250	1,12	1,51	1,97	1,2	1,2	1,9	2,4	2,4	3,8
34	25	60x60x6	60	82	150	250	1,14	1,53	2,01	1,2	1,2	1,9	2,4	2,4	3,8
43	32	60x60x6	60	86	150	250	1,18	1,57	2,09	1,1	1,1	1,9	2,2	2,2	3,8
49	40	60x60x6	60	89	150	250	1,20	1,59	2,13	1,0	1,0	1,9	2,2	2,2	3,8
53	50	60x60x6	60	92	150	250	1,45	1,84	2,63	1,0	1,0	3,2	2,0	2,0	6,4
61	50	60x60x6	60	96	150	250	1,53	1,92	2,79	1,0	1,0	3,2	2,0	2,0	6,4
68	65	60x60x6	60	100	150	250	1,58	1,97	2,89	1,0	1,0	3,2	2,0	2,0	6,4
77	65	60x60x6	60	104	150	250	1,61	2,00	2,95	0,9	0,9	3,2	1,8	1,8	6,4
83	80	60x60x6	60	107	150	250	1,68	2,07	3,09	0,9	0,9	3,2	1,8	1,8	6,4
89	80	60x60x6	60	110	150	250	1,70	2,09	3,13	0,9	0,9	3,2	1,8	1,8	6,4
104	100	60x60x6	60	120	150	250	2,49	2,88	4,71	0,8	0,8	4,8	1,6	1,6	9,6
108	100	60x60x6	60	122	150	250	2,70	3,09	5,13	0,8	0,8	4,8	1,6	1,6	9,6
115	100	60x60x6	60	125	150	250	2,74	3,13	5,21	0,8	0,8	4,8	1,6	1,6	9,6
129	125	60x60x6	60	132	150	250	2,81	3,20	5,35	0,7	0,7	4,8	1,4	1,4	9,6
133	125	60x60x6	60	134	150	250	2,89	3,28	5,51	0,7	0,7	4,8	1,4	1,4	9,6
140	125	60x60x6	60	138	150	250	2,94	3,33	5,61	0,7	0,7	4,8	1,4	1,4	9,6
154	150	60x60x6	60	145	150	250	3,07	3,46	5,87	0,6	0,6	4,8	1,4	1,4	9,6
159	150	60x60x6	60	147	150	250	3,11	3,50	5,95	0,6	0,6	4,8	1,2	1,2	9,6
169	150	60x60x6	60	152	150	250	3,19	3,58	6,11	0,6	0,6	4,8	1,2	1,2	9,6

Actual measures of the pipe supports depend on the individual profile tolerance.
Basis for the calculation of the load values can be found on page 2.0, 2.1 and 2.2. Subject to technical modifications.

A-4614 Marchtrenk | Linzer Straße 141 | tel. 0043 7243 / 58 222 | fax 0043 7243 / 58 222 800 | e-mail: office@hammerschmid.at | www.hammerschmid.at

pipe carriage

DN 50 - 1000
uninsulated slide support type UGL
uninsulated guide support type UFL
uninsulated fix support type UFP

type UGL, UFL

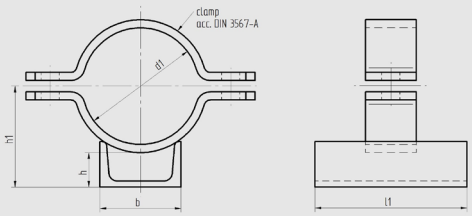

type UFP

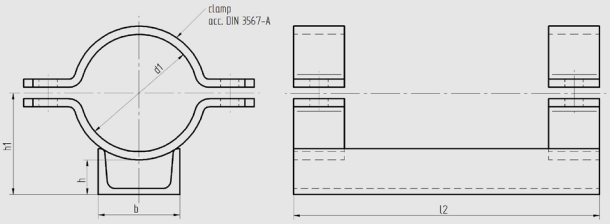

order example

type	material see 3.0.1	pipe diameter d1	h	extra surface protection
UGL	01	53	30	

weight kg/pc.

d1	nominal diameter	h	h1	b	l1	l2	GL	FL	FP
53	50	30	62	50	150	250	1,53	1,88	2,76
61	50	31	67	50	150	250	1,61	1,96	2,92
68	65	30	72	50	150	250	1,66	2,01	3,02
77	65	32	77	50	150	250	1,69	2,04	3,08
83	80	33	80	50	150	250	1,76	2,11	3,22
89	80	33	83	50	150	250	1,78	2,13	3,26
104	100	33	93	80	150	250	3,00	3,36	5,56
108	100	33	95	80	150	250	3,21	3,57	5,98
115	100	34	100	80	150	250	3,25	3,61	6,06
129	125	35	108	80	150	250	3,32	3,68	6,20
133	125	35	110	80	150	250	3,40	3,76	6,36
140	125	36	114	80	150	250	3,45	3,81	6,46
154	150	36	121	100	150	250	3,88	4,24	7,22
159	150	37	124	100	150	250	3,92	4,28	7,30
169	150	37	130	100	150	250	4,00	4,36	7,46
191	175	39	142	100	150	250	4,34	4,70	8,14
204	200	40	150	100	150	250	4,37	4,73	8,20
220	200	40	158	100	150	250	4,37	4,92	8,58
254	250	36	171	200	150	250	8,19	8,55	15,08
273	250	40	184	200	150	250	8,34	8,70	15,38
305	300	44	204	200	150	250	8,54	8,90	15,78
324	300	46	216	200	150	250	9,11	9,47	16,92
356	350	49	235	200	150	250	9,52	9,88	17,74
407	400	45	259	300	150	250	16,40	18,05	30,49
457	450	53	291	300	150	250	16,48	18,13	30,65
508	500	58	322	300	150	250	17,98	19,63	33,65
610	600	65	380	300	150	250	21,58	23,23	40,85
712	700	71	436	300	150	250	23,48	25,13	44,65
813	800	74	491	300	150	250	25,55	27,20	48,79
915	900	67	545	300	150	250	30,38	32,03	58,45
1016	1000	80	598	300	150	250	32,07	33,72	61,84

Any other height or a tilting of the pipe clamp axis is possible.

Actual measures of the pipe supports depend on the individual profile tolerance.
Basis for the calculation of the load values can be found on page 2.0, 2.1 and 2.2. Subject to technical modifications.

pipe carriage

DN 200 - 500
slide support type WGL
guide support type WFL
fix support type WFP

type WGL, WFL, WFP

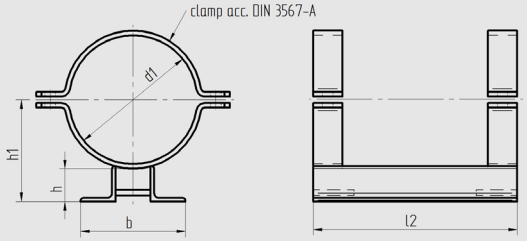

order example

type	material see 3.0.1	pipe diameter d1	h	extra surface protection
WGL	01	204	50	

height 50

d1	nominal diameter	h	h1	b	l2	angle	screws used	weight kg/pc.	Fx (kN)	Fy (kN)	Fz (kN)
204	200	50	160	209	350	60x60x6	16x50	10,25	3,96	3,96	11,88
220	200	50	168	212	350	60x60x6	16x50	10,66	3,96	3,96	11,88
254	250	50	185	219	350	60x60x6	20x60	13,44	3,96	3,96	11,88
273	250	50	194	223	350	60x60x6	20x60	13,78	3,96	3,96	11,88
305	300	50	210	293	350	70x70x7	20x60	16,34	3,96	3,96	16,17
324	300	50	220	297	350	70x70x7	20x60	17,53	3,96	3,96	16,17
356	350	50	236	304	350	70x70x7	20x60	18,44	3,96	3,96	16,17
407	400	50	263	375	350	80x80x8	24x70	29,06	3,96	3,96	21,12
457	450	50	288	388	350	80x80x8	24x70	29,42	3,96	3,96	21,12
508	500	50	314	400	350	80x80x8	24x70	32,61	3,96	3,96	21,12

Any other height or a tilting of the pipe clamp axis is possible.

Actual measures of the pipe supports depend on the individual profile tolerance.
Basis for the calculation of the load values can be found on page 2.0, 2.1 and 2.2. Subject to technical modifications.

pipe slide - slide support

DN 300 - 1000

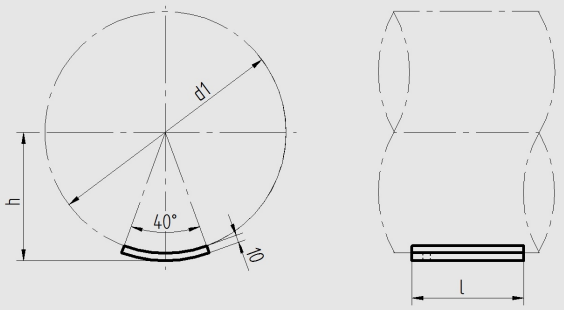

order example

type	material see 3.0.1	pipe diameter d1	extra surface protection
SBG	01	324	

d1	nominal diameter	h	l	weight kg/pc.
324	300	172	300	2,70
356	350	188	300	3,00
407	400	213	300	3,40
508	500	264	300	4,30
610	600	315	300	5,20
712	700	366	300	6,00
813	800	416	300	6,80
915	900	467	300	7,70
1016	1000	518	300	8,50

pipe slide - guide support

DN 300 - 1000

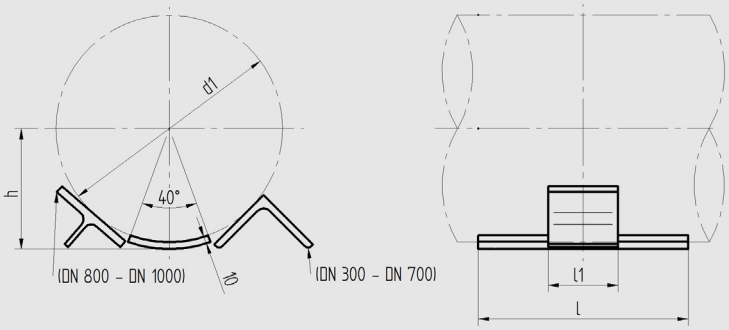

order example

type	material see 3.0.1	pipe diameter d1	extra surface protection
SBF	01	324	

d1	nominal diameter	angle	guide 1/2 IPB	l1	h	l	weight kg/pc.
324	300	100x10		100	172	300	5,72
356	350	100x10		100	188	300	6,02
407	400	120x12		100	213	300	7,72
508	500	120x12		100	264	300	8,62
610	600	150x15		200	315	300	18,72
712	700	150x15		200	366	300	19,60
813	800		240	300	416	300	31,70
915	900		240	300	467	300	32,60
1016	1000		240	300	518	300	34,21

Actual measures of the pipe supports depend on the individual profile tolerance.
Basis for the calculation of the load values can be found on page 2.0, 2.1 and 2.2. Subject to technical modifications.

support for vertical piping

DN 15 - 1000

The supplied fix support brackets of material S235JR have to be welded all around as you can see in the drawing. Is the pipe material of another material than S235JR the fix support brackets have to be provided by the building contractor.

order example

type	material see 3.0.1	pipe diameter d1	h	extra surface protection
TP	01	22	200	

d1	nominal diameter	h	b	m	screws used	weight kg/pc.
22	15	200	80	140	10x35	5,55
27	20	200	80	140	10x35	5,59
34	25	200	80	140	10x35	5,63
43	32	200	80	140	10x35	5,71
49	40	200	80	140	10x35	5,75
53	50	200	80	200	12x40	6,24
61	50	200	80	140	12x40	6,40
68	65	200	80	140	12x40	6,50
77	65	200	80	140	12x40	6,56
83	80	200	80	140	12x40	6,70
89	80	200	80	140	12x40	6,74
104	100	200	80	140	16x50	8,32
108	100	200	80	140	16x50	8,74
115	100	200	80	140	16x50	8,82
129	125	200	80	140	16x50	8,96
133	125	200	80	140	16x50	9,12
140	125	200	80	140	16x50	9,22
154	150	200	80	140	16x50	9,48
159	150	200	80	140	16x50	9,56
169	150	200	80	140	16x50	9,72
191	175	350	150	182	16x50	33,01
204	200	350	150	182	16x50	33,07
220	200	350	150	182	16x50	33,45
229	200	350	150	182	16x50	33,57
250	254	350	150	175	20x60	35,32
273	250	350	150	175	20x60	35,62
305	300	350	150	172	20x60	35,94
324	300	350	150	172	20x60	36,49
356	350	350	150	175	20x60	37,98
407	400	350	200	179	24x70	48,00
457	450	350	200	179	24x70	48,16
508	500	350	200	175	24x70	50,63
610	600	400	250	181	24x70	59,14
712	700	400	250	177	24x70	62,52
813	800	400	300	183	24x70	68,98
915	900	400	300	178	24x70	77,89
1016	1000	400	300	177	24x70	81,23

DN 15 - 150

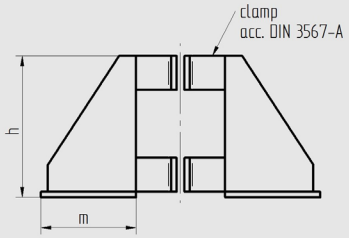

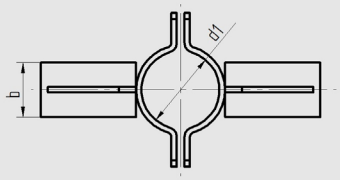

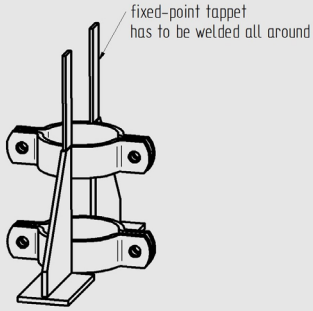

DN 175 - 1000

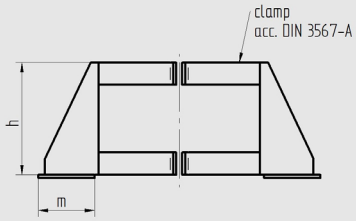

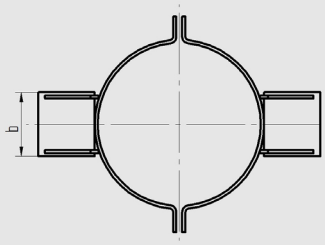

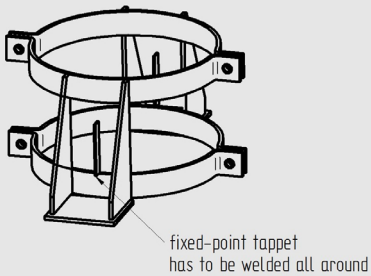

Actual measures of the pipe supports depend on the individual profile tolerance.
Basis for the calculation of the load values can be found on page 2.0, 2.1 and 2.2. Subject to technical modifications.

pipe carriage PE

DN 50 - 600

slide support type GL PE

order example

type	material see 3.0.1	pipe diameter d1	extra surface protection
GL PE	01	63	

DN 50 - 150

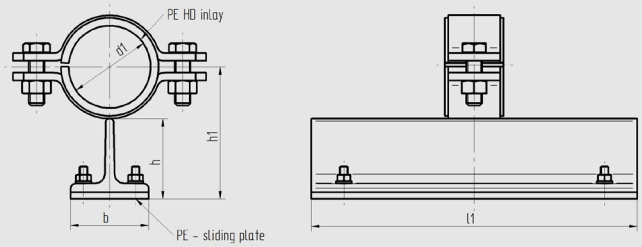

DN 200 - 600

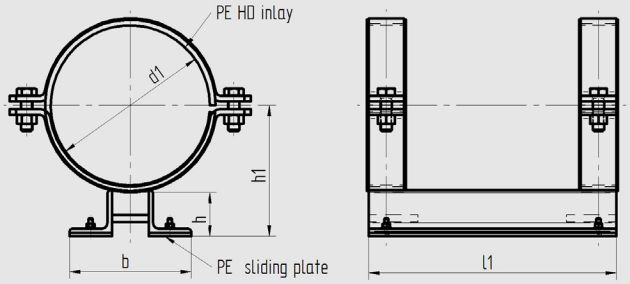

d1	nominal diameter	h	h1	b	l1	weight kg/pc. GL
63	50	61,5	101	60	250	2,37
75	65	61,5	107	60	250	2,46
90	80	61,5	114,5	60	250	2,55
110	100	61,5	126,5	60	250	3,62
140	125	61,5	141,5	60	250	3,86
160	150	61,5	151,5	60	250	4,05
225	200	62	184,5	172	350	10,72
280	250	60	211	192	350	16,51
315	300	62,5	231	264	350	16,94
400	400	63,5	277,5	346	350	28,02
500	500	66	330	472	350	37,57
630	600	66	395	510	350	49,92

The dimensions of the pipe clamp used are those from pipe class L10PE, material PE100, SDR 11 (tolerances according to standard DIN 8074).

Actual measures of the pipe supports depend on the individual profile tolerance.
Basis for the calculation of the load values can be found on page 2.0, 2.1 and 2.2. Subject to technical modifications.

pipe carriage PE

DN 50 - 600

guide support type FL PE

DN 50 - 100

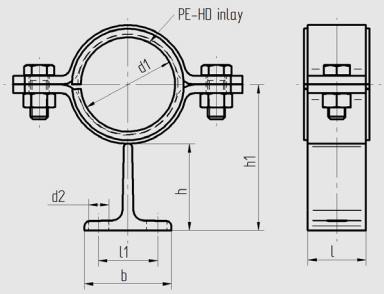

DN 125 - 600

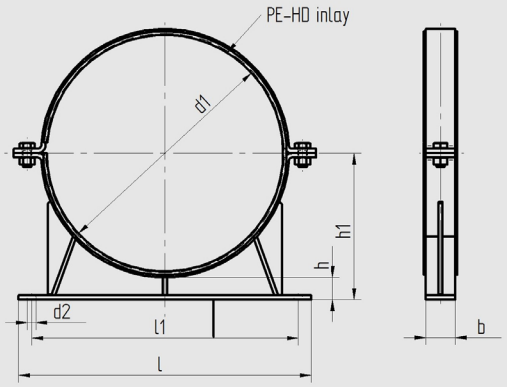

order example

type	material see 3.0.1	pipe diameter d1	extra surface protection
FL PE	01	63	

d1	nominal diameter	h	h1	b	d2	l	l1	weight kg/pc. FL	Fy (kN)	Fz (kN)
63	50	60	101	60	14	40	40	0,98	0,5	1,0
75	65	60	107	60	14	40	40	1,05	0,5	1,0
90	80	60	115	60	14	40	40	1,14	0,5	1,0
110	100	60	127	60	14	50	40	2,14	0,5	1,0
140	125	60	142		18	250	210	3,90	5,0	1,3
160	150	60	152		18	280	240	4,78	5,0	2,0
225	200	60	185		18	360	310	5,11	5,0	4,0
280	250	60	211		18	400	360	7,22	5,0	5,0
315	300	60	231		18	460	400	7,82	5,0	7,0
400	400	60	278		18	560	500	13,82	5,0	15,0
500	500	60	330		23	660	580	18,42	5,0	20,0
630	600	60	395		23	770	700	24,44	5,0	29,0

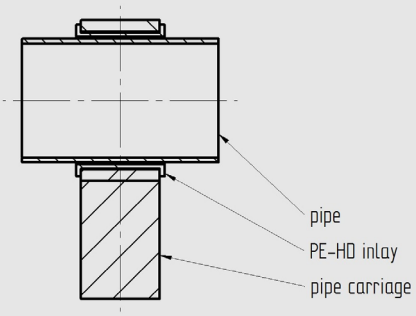

The clearance between the PE-HD insert and the pipe allows for the movement required for the pipe while at the same time the insert serves as a protector.

DN	50	65	80	100	125	150	200	250	300	400	500	600
screw quality	8.8	8.8	8.8	8.8	8.8	8.8	8.8	8.8	8.8	8.8	8.8	8.8
base plate tightened to a torque Nm	80	80	80	80	180	180	180	180	180	180	360	360

The dimensions of the pipe clamp used are those from pipe class L10PE, material PE100, SDR 11 (tolerance according to standard DIN 8074).

The pipe carriages must be mounted with the predetermined torque and mounted in an upright and horizontal position in order to fulfil the structural analysis criteria. We here at Rohrbefestigungen Hammerschmid GmbH can accpet no liability for damages resulting from any torque momentums, assembly set ups or other similar scenarios that have not been discussed with us first.

Actual measures of the pipe supports depend on the individual profile tolerance.
Basis for the calculation of the load values can be found on page 2.0, 2.1 and 2.2. Subject to technical modifications.

pipe carriage PE

DN 50 - 600

fix support type FP PE

DN 50 - 100

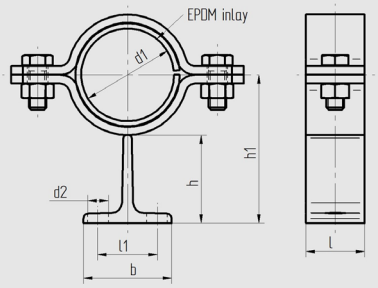

DN 125 - 600

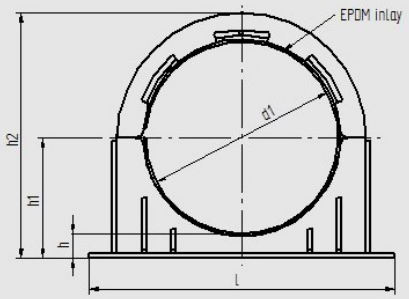

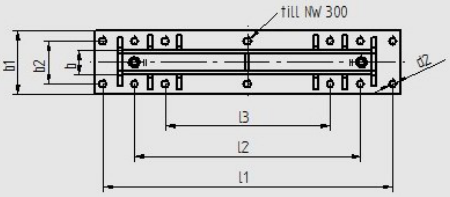

order example

type	material see 3.0.1	pipe diameter d1	extra surface protection
FP PE	01	63	

d1	nominal diameter	h	h1	h2	b	b1	b2	d2	l	l1	l2	l3	FP weight kg/pc.	Fx (kN)	Fy (kN)	Fz (kN)
63	50	60	101		60			14	40	40			1,28	4,0	1,0	0,5
75	65	60	107		60			14	40	40			1,40	4,0	1,0	0,5
90	80	60	115		60			14	40	40			1,54	4,0	1,0	0,5
110	100	60	127		60			14	40	40			2,80	4,0	1,0	0,5
140	125	60	142	272	50	120	90	18	320	280			10,93	10,0	1,3	5,0
160	150	60	152	289	50	120	90	18	360	320			11,65	12,0	5,0	5,0
225	200	60	185	357	50	140	100	18	400	360			15,93	25,0	5,0	5,0
280	250	60	211	426	60	160	120	18	500	460			22,46	37,0	5,0	5,0
315	300	60	231	461	60	160	120	18	540	500			25,93	47,0	7,0	5,0
400	400	60	278	563	70	200	140	23	680	630	280		54,99	75,0	12,0	10,0
500	500	60	330	665	70	200	140	23	830	760	590	380	75,15	117,0	20,0	10,0
630	600	60	395	803	80	210	140	23	1000	950	740	540	106,01	130,0	29,0	10,0

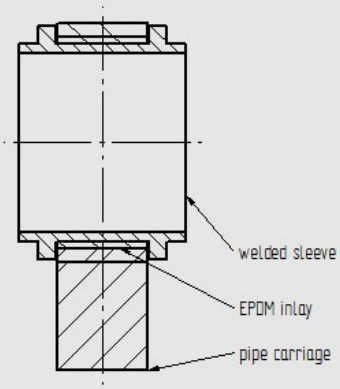

The bond on the fixed point fittings must conform to the forces specified. Power transmission is not possible while using a single clamp.

DN	50	65	80	100	125	150	200	250	300	400	500	600
clamp screw	8.8	8.8	8.8	8.8	8.8	8.8	8.8	8.8	8.8	8.8	10.9	12.9
clamp tightened to a torque Nm	80	80	80	80	80	80	180	360	360	700	1000	1200
base plate tightened to a torque Nm	80	80	80	80	80	80	180	180	180	360	360	360

The dimensions of the pipe clamp used are those from pipe class L10PE, material PE100, SDR 11 (tolerance according to standard DIN 8074). The fix point power transmission occurs, for the most part, by positive locking with PE100, SDR 11.

The pipe carriages must be mounted with the predetermined torque and mounted in an upright and horizontal position in order to fulfil the structural analysis criteria.
We here at Rohrbefestigungen Hammerschmid GmbH can accpet no liability for damages resulting from any torque momentums, assembly set ups or other similar scenarios that have not been discussed with us first.

Actual measures of the pipe supports depend on the individual profile tolerance.
Basis for the calculation of the load values can be found on page 2.0, 2.1 and 2.2. Subject to technical modifications.

guide angle

type FW

l	b	a	s	
100	22	30	5	type A DN 15-DN 500
100	25	40	5	type B DN 600-DN 1000

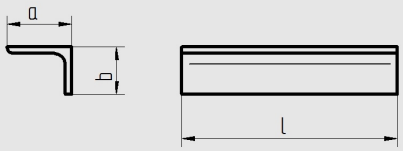

guide bracket

type FK

milled from profile 50x25

l	b	a	e	f	
50	25	50	15	25	type A DN 15-DN 1000

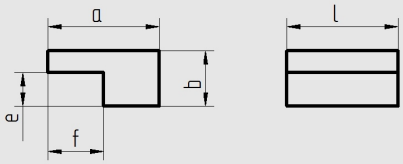

guide rail

type FL

l	b	s	
150	30	5	type A DN 15-DN 500
150	70	10	type B DN 600-DN 1000

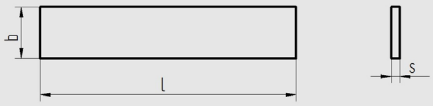

Actual measures of the pipe supports depend on the individual profile tolerance.
Basis for the calculation of the load values can be found on page 2.0, 2.1 and 2.2. Subject to technical modifications.

beam clamp for HEA-HEB

hot dip galvanized

clamping range	l	m	e	weight	Fz	Fy
100-120	195	12	17	1,84	-3,2	3,9
140-160	235	12	17	1,90	-3,2	3,9
180-200	275	12	17	1,95	-3,2	3,9

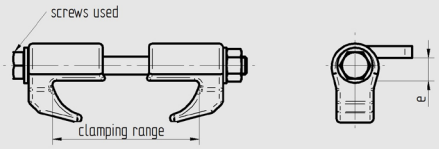

beam clamp for IPE

hot dip galvanized

clamping range	e	screws used	weight	Fz	Fy
73-91	17	12x150	1,52	-3,2	3,9

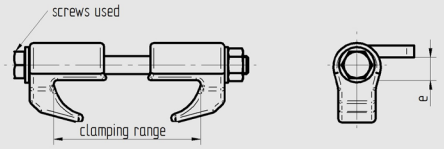

beam clamp for UNP

hot dip galvanized

UNP	e	screws used	weight	Fz	Fy
80	17	12x100	2,17	-3,2	3,9
100	17	12x100	2,25	-3,2	3,9
120	17	12x100	2,29	-3,2	3,9
140	17	12x110	2,46	-3,2	3,9
160	17	12x110	2,54	-3,2	3,9
180	17	12x120	2,65	-3,2	3,9
200	17	12x120	2,73	-3,2	3,9

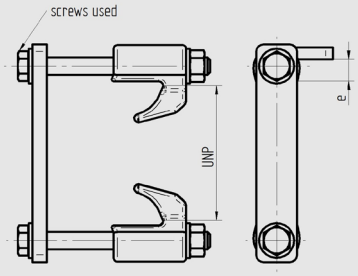

Actual measures of the pipe supports depend on the individual profile tolerance.
Basis for the calculation of the load values can be found on page 2.0, 2.1 and 2.2. Subject to technical modifications.

slide plate

dimensioning according to application

for the offer we need the following data:

1.) steel box, measures, material
2.) teflon measures
3.) if necessary: screws and drilling image dimension

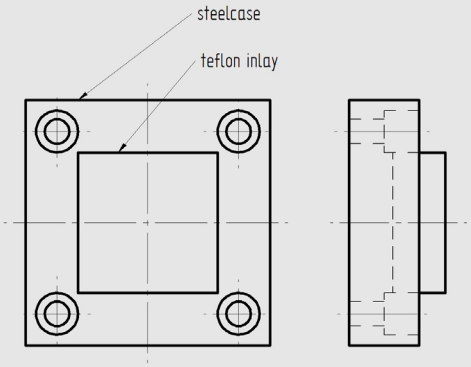

hardwood shimes

dimensioning according to application

for the offer we need the following data:

1.) type of the pipe carriage
2.) diameter of the pipe clamp
3.) diameter of the medium pipe

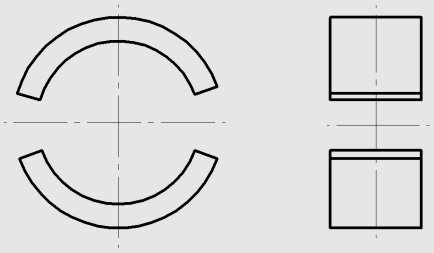

Actual measures of the pipe supports depend on the individual profile tolerance.
Basis for the calculation of the load values can be found on page 2.0, 2.1 and 2.2. Subject to technical modifications.

A-4614 Marchtrenk | Linzer Straße 141 | tel. 0043 7243 / 58 222 | fax 0043 7243 / 58 222 800 | e-mail: office@hammerschmid.at | www.hammerschmid.at

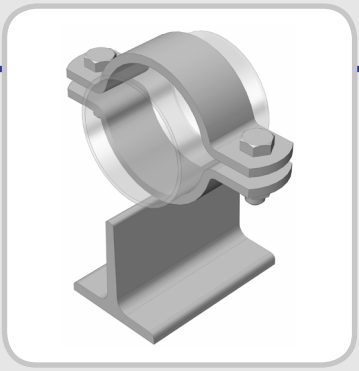

pipe carriage slide support type GL DN 15 - 150

S235JR

product group discount: 3210

item number	designation	price Euro	price per
30001	GL 01 22 100	1.734,00	100
30002	GL 01 27 100	1.748,00	100
30003	GL 01 34 100	1.748,00	100
30004	GL 01 43 100	1.766,00	100
30005	GL 01 49 100	1.766,00	100
30006	GL 01 53 100	1.864,00	100
30007	GL 01 61 100	1.864,00	100
30008	GL 01 68 100	1.882,00	100
30009	GL 01 77 100	1.882,00	100
30010	GL 01 83 100	1.898,00	100
30011	GL 01 89 100	1.898,00	100
30012	GL 01 108 100	2.178,00	100
30013	GL 01 115 100	2.194,00	100
30014	GL 01 133 100	2.214,00	100
30015	GL 01 140 100	2.228,00	100
30016	GL 01 159 100	2.246,00	100
30017	GL 01 169 100	2.262,00	100

item number	designation	price Euro	price per
30019	GL 01 22 80	1.338,00	100
30020	GL 01 27 80	1.370,00	100
30021	GL 01 34 80	1.370,00	100
30022	GL 01 43 80	1.370,00	100
30023	GL 01 49 80	1.370,00	100
30024	GL 01 53 80	1.486,00	100
30025	GL 01 61 80	1.486,00	100
30026	GL 01 68 80	1.502,00	100
30027	GL 01 77 80	1.502,00	100
30028	GL 01 83 80	1.502,00	100
30029	GL 01 89 80	1.502,00	100

item number	designation	price Euro	price per
30030	GL 01 22 60	1.156,00	100
30031	GL 01 27 60	1.172,00	100
30032	GL 01 34 60	1.172,00	100
30033	GL 01 43 60	1.188,00	100
30034	GL 01 49 60	1.188,00	100
30035	GL 01 53 60	1.288,00	100
30036	GL 01 61 60	1.288,00	100

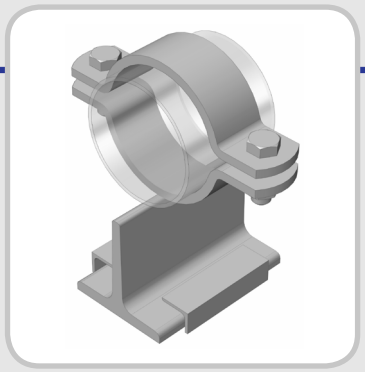

pipe carriage guide support type FL DN 15 - 150

S235JR

product group discount: 3220

item number	designation	price Euro	price per
30145	FL 01 22 100	1.998,00	100
30146	FL 01 27 100	2.030,00	100
30147	FL 01 34 100	2.030,00	100
30148	FL 01 43 100	2.030,00	100
30149	FL 01 49 100	2.046,00	100
30150	FL 01 53 100	2.146,00	100
30151	FL 01 61 100	2.146,00	100
30152	FL 01 68 100	2.162,00	100
30153	FL 01 77 100	2.162,00	100
30154	FL 01 83 100	2.178,00	100
30155	FL 01 89 100	2.178,00	100
30156	FL 01 108 100	2.444,00	100
30157	FL 01 115 100	2.460,00	100
30158	FL 01 133 100	2.492,00	100
30159	FL 01 140 100	2.508,00	100
30160	FL 01 159 100	2.526,00	100
30161	FL 01 169 100	2.542,00	100

item number	designation	price Euro	price per
30164	FL 01 22 80	1.618,00	100
30165	FL 01 27 80	1.636,00	100
30166	FL 01 34 80	1.636,00	100
30167	FL 01 43 80	1.652,00	100
30168	FL 01 49 80	1.652,00	100
30169	FL 01 53 80	1.748,00	100
30170	FL 01 61 80	1.766,00	100
30171	FL 01 68 80	1.766,00	100
30172	FL 01 77 80	1.782,00	100
30173	FL 01 83 80	1.782,00	100
30174	FL 01 89 80	1.782,00	100

item number	designation	price Euro	price per
30175	FL 01 22 60	1.420,00	100
30176	FL 01 27 60	1.454,00	100
30177	FL 01 34 60	1.454,00	100
30178	FL 01 43 60	1.470,00	100
30179	FL 01 49 60	1.470,00	100
30180	FL 01 53 60	1.584,00	100
30181	FL 01 61 60	1.584,00	100

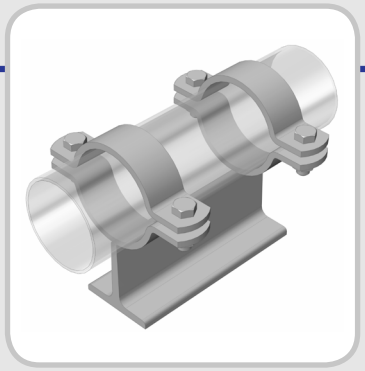

pipe carriage fix support type FP DN 15 - 150

S235JR

product group discount: 3230

item number	designation	price Euro	price per
30073	FP 01 22 100	2.904,00	100
30074	FP 01 27 100	2.954,00	100
30075	FP 01 34 100	2.970,00	100
30076	FP 01 43 100	2.970,00	100
30077	FP 01 49 100	2.988,00	100
30078	FP 01 53 100	3.184,00	100
30079	FP 01 61 100	3.202,00	100
30080	FP 01 68 100	3.218,00	100
30081	FP 01 77 100	3.236,00	100
30082	FP 01 83 100	3.252,00	100
30083	FP 01 89 100	3.252,00	100
30084	FP 01 108 100	3.812,00	100
30085	FP 01 115 100	3.828,00	100
30086	FP 01 133 100	3.880,00	100
30087	FP 01 140 100	3.912,00	100
30088	FP 01 159 100	3.962,00	100
30089	FP 01 169 100	3.994,00	100

item number	designation	price Euro	price per
30091	FP 01 22 80	2.262,00	100
30092	FP 01 27 80	2.310,00	100
30093	FP 01 34 80	2.310,00	100
30094	FP 01 43 80	2.326,00	100
30095	FP 01 49 80	2.326,00	100
30096	FP 01 53 80	2.542,00	100
30097	FP 01 61 80	2.558,00	100
30098	FP 01 68 80	2.574,00	100
30099	FP 01 77 80	2.592,00	100
30100	FP 01 83 80	2.592,00	100
30101	FP 01 89 80	2.608,00	100

item number	designation	price Euro	price per
30102	FP 01 22 60	1.948,00	100
30103	FP 01 27 60	2.014,00	100
30104	FP 01 34 60	2.014,00	100
30105	FP 01 43 60	2.014,00	100
30106	FP 01 49 60	2.030,00	100
30107	FP 01 53 60	2.246,00	100
30108	FP 01 61 60	2.246,00	100

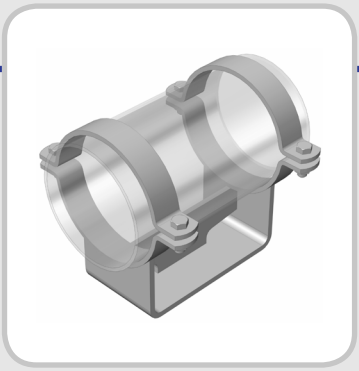

pipe carriage slide support type GL DN 200 - 1000

S235JR

product group discount: 3240

item number	designation	price Euro	price per
30329	GL 01 204 100	13.368,00	100
30330	GL 01 220 100	13.368,00	100
30331	GL 01 254 100	14.576,00	100
30332	GL 01 273 100	14.576,00	100
30333	GL 01 305 100	14.954,00	100
30334	GL 01 324 100	14.954,00	100
30335	GL 01 356 100	15.268,00	100
30336	GL 01 407 100	22.134,00	100
30337	GL 01 457 100	22.398,00	100
30338	GL 01 508 100	22.778,00	100
30339	GL 01 610 100	37.384,00	100
30340	GL 01 712 100	38.340,00	100
30341	GL 01 813 100	46.522,00	100
30342	GL 01 915 100	48.278,00	100
30343	GL 01 1016 100	49.184,00	100

item number	designation	price Euro	price per
30464	GL 01 204 160	16.570,00	100
30465	GL 01 220 160	16.570,00	100
30466	GL 01 254 160	17.528,00	100
30467	GL 01 273 160	17.528,00	100
30468	GL 01 305 160	18.254,00	100
30469	GL 01 324 160	18.254,00	100
30470	GL 01 356 160	18.750,00	100
30471	GL 01 407 160	28.026,00	100
30472	GL 01 457 160	28.306,00	100
30473	GL 01 508 160	28.734,00	100
30474	GL 01 610 160	44.366,00	100
30475	GL 01 712 160	45.356,00	100
30476	GL 01 813 160	54.748,00	100
30477	GL 01 915 160	56.612,00	100
30478	GL 01 1016 160	57.520,00	100

item number	designation	price Euro	price per
30599	GL 01 204 220	20.204,00	100
30600	GL 01 220 220	20.204,00	100
30601	GL 01 254 220	21.144,00	100
30602	GL 01 273 220	21.144,00	100
30603	GL 01 305 220	22.166,00	100
30604	GL 01 324 220	22.166,00	100
30605	GL 01 356 220	22.794,00	100
30606	GL 01 407 220	32.136,00	100
30607	GL 01 457 220	32.400,00	100
30608	GL 01 508 220	32.846,00	100
30609	GL 01 610 220	49.696,00	100
30610	GL 01 712 220	50.688,00	100
30611	GL 01 813 220	60.804,00	100
30612	GL 01 915 220	62.670,00	100
30613	GL 01 1016 220	63.562,00	100

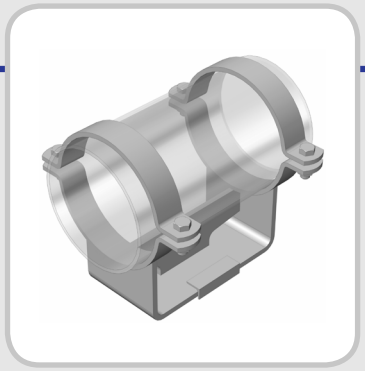

pipe carriage guide support type FL DN 200 - 1000

S235JR

product group discount: 3250

item number	designation	price Euro	price per
30374	FL 01 204 100	13.650,00	100
30375	FL 01 220 100	13.650,00	100
30376	FL 01 254 100	14.838,00	100
30377	FL 01 273 100	14.838,00	100
30378	FL 01 305 100	15.234,00	100
30379	FL 01 324 100	15.234,00	100
30380	FL 01 356 100	15.548,00	100
30381	FL 01 407 100	22.398,00	100
30382	FL 01 457 100	22.678,00	100
30383	FL 01 508 100	23.058,00	100
30384	FL 01 610 100	40.106,00	100
30385	FL 01 712 100	41.082,00	100
30386	FL 01 813 100	49.152,00	100
30387	FL 01 915 100	51.000,00	100
30388	FL 01 1016 100	51.908,00	100

item number	designation	price Euro	price per
30509	FL 01 204 160	16.852,00	100
30510	FL 01 220 160	16.852,00	100
30511	FL 01 254 160	17.808,00	100
30512	FL 01 273 160	17.808,00	100
30513	FL 01 305 160	18.534,00	100
30514	FL 01 324 160	18.534,00	100
30515	FL 01 356 160	19.032,00	100
30516	FL 01 407 160	28.306,00	100
30517	FL 01 457 160	28.570,00	100
30518	FL 01 508 160	29.016,00	100
30519	FL 01 610 160	47.090,00	100
30520	FL 01 712 160	48.096,00	100
30521	FL 01 813 160	57.488,00	100
30522	FL 01 915 160	59.336,00	100
30523	FL 01 1016 160	60.244,00	100

item number	designation	price Euro	price per
30644	FL 01 204 220	20.532,00	100
30645	FL 01 220 220	20.532,00	100
30646	FL 01 254 220	21.490,00	100
30647	FL 01 273 220	21.490,00	100
30648	FL 01 305 220	22.432,00	100
30649	FL 01 324 220	22.432,00	100
30650	FL 01 356 220	23.058,00	100
30651	FL 01 407 220	32.416,00	100
30652	FL 01 457 220	32.680,00	100
30653	FL 01 508 220	33.126,00	100
30654	FL 01 610 220	52.418,00	100
30655	FL 01 712 220	53.410,00	100
30656	FL 01 813 220	63.528,00	100
30657	FL 01 915 220	65.392,00	100
30658	FL 01 1016 220	66.300,00	100

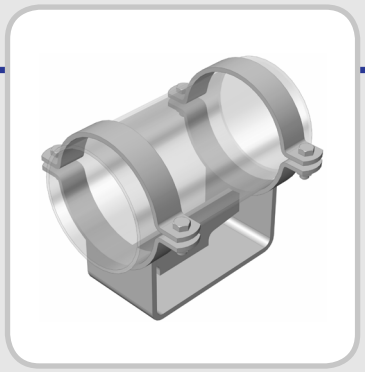

pipe carriage fix support type FP DN 200 - 1000

S235JR

product group discount: 3260

item number	designation	price Euro	price per
30419	FP 01 204 100	13.368,00	100
30420	FP 01 220 100	13.368,00	100
30421	FP 01 254 100	14.576,00	100
30422	FP 01 273 100	14.576,00	100
30423	FP 01 305 100	14.954,00	100
30424	FP 01 324 100	14.954,00	100
30425	FP 01 356 100	15.268,00	100
30426	FP 01 407 100	22.134,00	100
30427	FP 01 457 100	22.398,00	100
30428	FP 01 508 100	22.778,00	100
30429	FP 01 610 100	37.384,00	100
30430	FP 01 712 100	38.340,00	100
30431	FP 01 813 100	46.414,00	100
30432	FP 01 915 100	48.278,00	100
30433	FP 01 1016 100	49.184,00	100

item number	designation	price Euro	price per
30554	FP 01 204 160	16.570,00	100
30555	FP 01 220 160	16.570,00	100
30556	FP 01 254 160	17.528,00	100
30557	FP 01 273 160	17.528,00	100
30558	FP 01 305 160	18.254,00	100
30559	FP 01 324 160	18.254,00	100
30560	FP 01 356 160	18.750,00	100
30561	FP 01 407 160	28.026,00	100
30562	FP 01 457 160	28.306,00	100
30563	FP 01 508 160	28.734,00	100
30564	FP 01 610 160	44.366,00	100
30565	FP 01 712 160	45.356,00	100
30566	FP 01 813 160	54.748,00	100
30567	FP 01 915 160	56.612,00	100
30568	FP 01 1016 160	57.520,00	100

item number	designation	price Euro	price per
30689	FP 01 204 220	20.204,00	100
30690	FP 01 220 220	20.204,00	100
30691	FP 01 254 220	21.144,00	100
30692	FP 01 273 220	21.144,00	100
30693	FP 01 305 220	22.166,00	100
30694	FP 01 324 220	22.166,00	100
30695	FP 01 356 220	22.794,00	100
30696	FP 01 407 220	32.136,00	100
30697	FP 01 457 220	32.400,00	100
30698	FP 01 508 220	32.846,00	100
30699	FP 01 610 220	49.696,00	100
30700	FP 01 712 220	50.688,00	100
30701	FP 01 813 220	60.804,00	100
30702	FP 01 915 220	62.670,00	100
30703	FP 01 1016 220	63.562,00	100

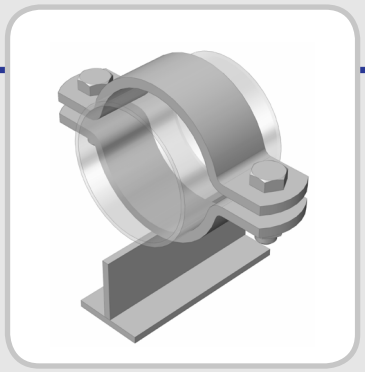

pipe carriage slide support type GL DN 15 - 150

1.4301 All prices without alloy surcharge.
product group discount: 3280
1.4571 All prices without alloy surcharge.
product group discount: 32112

item number	designation	price Euro	price per
30746	GL 05 22 60	1.786,00	100
30747	GL 05 27 60	1.922,00	100
30748	GL 05 34 60	1.938,00	100
30749	GL 05 43 60	2.000,00	100
30750	GL 05 49 60	2.030,00	100
30751	GL 05 53 60	2.428,00	100
30752	GL 05 61 60	2.472,00	100
30753	GL 05 68 60	2.550,00	100
30754	GL 05 77 60	2.594,00	100
30755	GL 05 83 60	2.656,00	100
30756	GL 05 89 60	2.702,00	100
30757	GL 05 104 60	4.854,00	100
30758	GL 05 108 60	4.854,00	100
30759	GL 05 115 60	4.944,00	100
30760	GL 05 129 60	5.174,00	100
30761	GL 05 133 60	5.174,00	100
30762	GL 05 140 60	5.280,00	100
30763	GL 05 154 60	5.556,00	100
30764	GL 05 159 60	5.556,00	100
30765	GL 05 169 60	5.678,00	100

item number	designation	price Euro	price per
32220	GL 06 22 60	2.006,00	100
32221	GL 06 27 60	2.146,00	100
32222	GL 06 34 60	2.166,00	100
32223	GL 06 43 60	2.236,00	100
32224	GL 06 49 60	2.270,00	100
32225	GL 06 53 60	2.718,00	100
32226	GL 06 61 60	2.778,00	100
32227	GL 06 68 60	2.866,00	100
32228	GL 06 77 60	2.916,00	100
32229	GL 06 83 60	2.992,00	100
32230	GL 06 89 60	3.042,00	100
32231	GL 06 104 60	5.352,00	100
32232	GL 06 108 60	5.394,00	100
32233	GL 06 115 60	5.492,00	100
32234	GL 06 129 60	5.736,00	100
32235	GL 06 133 60	5.752,00	100
32236	GL 06 140 60	5.868,00	100
32237	GL 06 154 60	6.170,00	100
32238	GL 06 159 60	6.178,00	100
32239	GL 06 169 60	6.316,00	100

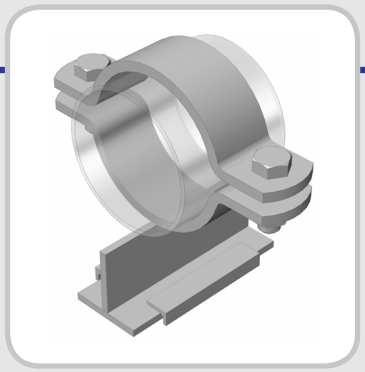

pipe carriage guide support type FL DN 15 - 150

1.4301 All prices without alloy surcharge.
product group discount: 3290
1.4571 All prices without alloy surcharge.
product group discount: 32113

item number	designation	price Euro	price per
30766	FL 05 22 60	1.938,00	100
30767	FL 05 27 60	2.076,00	100
30768	FL 05 34 60	2.092,00	100
30769	FL 05 43 60	2.152,00	100
30770	FL 05 49 60	2.184,00	100
30771	FL 05 53 60	2.580,00	100
30772	FL 05 61 60	2.624,00	100
30773	FL 05 68 60	2.702,00	100
30774	FL 05 77 60	2.748,00	100
30775	FL 05 83 60	2.808,00	100
30776	FL 05 89 60	2.854,00	100
30777	FL 05 104 60	5.006,00	100
30778	FL 05 108 60	5.006,00	100
30779	FL 05 115 60	5.098,00	100
30780	FL 05 129 60	5.326,00	100
30781	FL 05 133 60	5.326,00	100
30782	FL 05 140 60	5.434,00	100
30783	FL 05 154 60	5.708,00	100
30784	FL 05 159 60	5.708,00	100
30785	FL 05 169 60	5.830,00	100

item number	designation	price Euro	price per
32240	FL 06 22 60	2.236,00	100
32241	FL 06 27 60	2.378,00	100
32242	FL 06 34 60	2.398,00	100
32243	FL 06 43 60	2.466,00	100
32244	FL 06 49 60	2.502,00	100
32245	FL 06 53 60	2.948,00	100
32246	FL 06 61 60	2.952,00	100
32247	FL 06 68 60	3.096,00	100
32248	FL 06 77 60	3.148,00	100
32249	FL 06 83 60	3.222,00	100
32250	FL 06 89 60	3.272,00	100
32251	FL 06 104 60	5.600,00	100
32252	FL 06 108 60	5.624,00	100
32253	FL 06 115 60	5.724,00	100
32254	FL 06 129 60	5.966,00	100
32255	FL 06 133 60	5.982,00	100
32256	FL 06 140 60	6.094,00	100
32257	FL 06 154 60	6.400,00	100
32258	FL 06 159 60	6.408,00	100
32259	FL 06 169 60	6.546,00	100

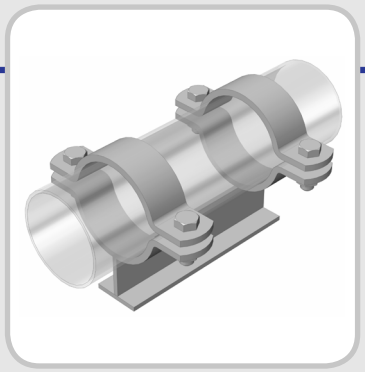

pipe carriage fix support type FP DN 15 - 150

1.4301 All prices without alloy surcharge.
product group discount: 32100
1.4571 All prices without alloy surcharge.
product group discount: 32114

item number	designation	price Euro	price per
30786	FP 05 22 60	3.296,00	100
30787	FP 05 27 60	3.572,00	100
30788	FP 05 34 60	3.618,00	100
30789	FP 05 43 60	3.754,00	100
30790	FP 05 49 60	3.784,00	100
30791	FP 05 53 60	4.594,00	100
30792	FP 05 61 60	4.670,00	100
30793	FP 05 68 60	4.838,00	100
30794	FP 05 77 60	4.914,00	100
30795	FP 05 83 60	5.066,00	100
30796	FP 05 89 60	5.144,00	100
30797	FP 05 104 60	9.462,00	100
30798	FP 05 108 60	9.462,00	100
30799	FP 05 115 60	9.646,00	100
30800	FP 05 129 60	10.088,00	100
30801	FP 05 133 60	10.088,00	100
30802	FP 05 140 60	10.302,00	100
30803	FP 05 154 60	10.852,00	100
30804	FP 05 159 60	10.852,00	100
30805	FP 05 169 60	11.110,00	100

item number	designation	price Euro	price per
32260	FP 06 22 60	3.682,00	100
32261	FP 06 27 60	3.966,00	100
32262	FP 06 34 60	4.020,00	100
32263	FP 06 43 60	4.163,00	100
32264	FP 06 49 60	4.210,00	100
32265	FP 06 53 60	5.120,00	100
32266	FP 06 61 60	5.228,00	100
32267	FP 06 68 60	5.416,00	100
32268	FP 06 77 60	5.504,00	100
32269	FP 06 83 60	5.684,00	100
32270	FP 06 89 60	5.770,00	100
32271	FP 06 104 60	10.404,00	100
32272	FP 06 108 60	10.520,00	100
32273	FP 06 115 60	10.688,00	100
32274	FP 06 129 60	11.158,00	100
32275	FP 06 133 60	11.190,00	100
32276	FP 06 140 60	11.424,00	100
32277	FP 06 154 60	12.026,00	100
32278	FP 06 159 60	12.042,00	100
32279	FP 06 169 60	12.332,00	100

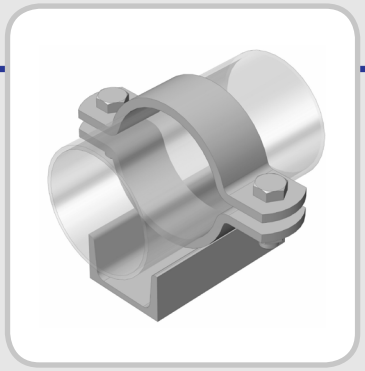

uninsulated slide support type UGL DN 50 - 1000

S235JR

product group discount: 32120

item number	designation	price Euro	price per
33001	UGL 01 53	1.957,00	100
33002	UGL 01 61	1.965,00	100
33003	UGL 01 68	1.993,00	100
33004	UGL 01 77	2.002,00	100
33005	UGL 01 83	2.020,00	100
33006	UGL 01 89	2.022,00	100
33007	UGL 01 104	2.362,00	100
33008	UGL 01 108	2.364,00	100
33009	UGL 01 115	2.380,00	100
33010	UGL 01 129	2.402,00	100
33011	UGL 01 133	2.407,00	100
33012	UGL 01 140	2.414,00	100
33013	UGL 01 154	2.540,00	100
33014	UGL 01 159	2.580,00	100
33015	UGL 01 169	2.600,00	100
33016	UGL 01 191	2.639,00	100
33017	UGL 01 204	2.645,00	100
33018	UGL 01 220	2.744,00	100
33019	UGL 01 254	4.943,00	100
33020	UGL 01 273	4.972,00	100
33021	UGL 01 305	5.100,00	100
33022	UGL 01 324	5.125,00	100
33023	UGL 01 356	5.242,00	100
33024	UGL 01 407	8.758,00	100
33025	UGL 01 457	9.426,00	100
33026	UGL 01 508	9.589,00	100
33027	UGL 01 610	10.736,00	100
33028	UGL 01 712	11.392,00	100
33029	UGL 01 813	12.381,00	100
33030	UGL 01 915	14.963,00	100
33031	UGL 01 1016	15.360,00	100

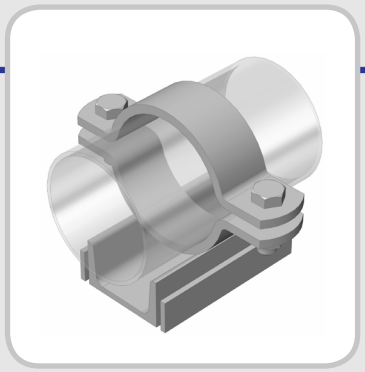

uninsulated guide support type UFL DN 50 - 1000

S235JR

product group discount: 32123

item number	designation	price Euro	price per
33032	UFL 01 53	2.084,00	100
33033	UFL 01 61	2.091,00	100
33034	UFL 01 68	2.120,00	100
33035	UFL 01 77	2.129,00	100
33036	UFL 01 83	2.146,00	100
33037	UFL 01 89	2.149,00	100
33038	UFL 01 104	2.489,00	100
33039	UFL 01 108	2.491,00	100
33040	UFL 01 115	2.506,00	100
33041	UFL 01 129	2.528,00	100
33042	UFL 01 133	2.534,00	100
33043	UFL 01 140	2.541,00	100
33044	UFL 01 154	2.666,00	100
33045	UFL 01 159	2.707,00	100
33046	UFL 01 169	2.727,00	100
33047	UFL 01 191	2.766,00	100
33048	UFL 01 204	2.790,00	100
33049	UFL 01 220	2.871,00	100
33050	UFL 01 254	5.069,00	100
33051	UFL 01 273	5.098,00	100
33052	UFL 01 305	5.227,00	100
33053	UFL 01 324	5.252,00	100
33054	UFL 01 356	5.369,00	100
33055	UFL 01 407	9.103,00	100
33056	UFL 01 457	9.771,00	100
33057	UFL 01 508	9.933,00	100
33058	UFL 01 610	11.081,00	100
33059	UFL 01 712	11.737,00	100
33060	UFL 01 813	12.726,00	100
33061	UFL 01 915	15.308,00	100
33062	UFL 01 1016	15.704,00	100

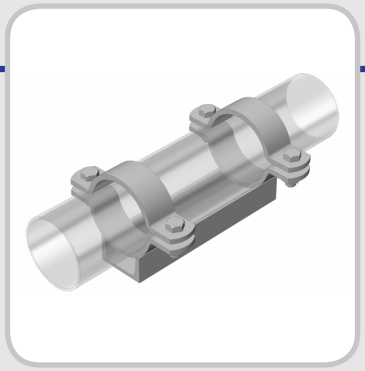

uninsulated fix support type UFP DN 50 - 1000

S235JR

product group discount: 32126

item number	designation	price Euro	price per
33063	UFP 01 53	3.840,00	100
33064	UFP 01 61	3.854,00	100
33065	UFP 01 68	3.911,00	100
33066	UFP 01 77	3.929,00	100
33067	UFP 01 83	3.964,00	100
33068	UFP 01 89	3.969,00	100
33069	UFP 01 104	4.644,00	100
33070	UFP 01 108	4.649,00	100
33071	UFP 01 115	4.700,00	100
33072	UFP 01 129	4.724,00	100
33073	UFP 01 133	4.735,00	100
33074	UFP 01 140	4.749,00	100
33075	UFP 01 154	4.980,00	100
33076	UFP 01 159	5.020,00	100
33077	UFP 01 169	5.101,00	100
33078	UFP 01 191	5.179,00	100
33079	UFP 01 204	5.350,00	100
33080	UFP 01 220	5.389,00	100
33081	UFP 01 254	9.644,00	100
33082	UFP 01 273	9.701,00	100
33083	UFP 01 305	9.958,00	100
33084	UFP 01 324	10.009,00	100
33085	UFP 01 356	10.243,00	100
33086	UFP 01 407	17.039,00	100
33087	UFP 01 457	18.375,00	100
33088	UFP 01 508	18.700,00	100
33089	UFP 01 610	20.995,00	100
33090	UFP 01 712	22.307,00	100
33091	UFP 01 813	24.285,00	100
33092	UFP 01 915	29.449,00	100
33093	UFP 01 1016	30.242,00	100

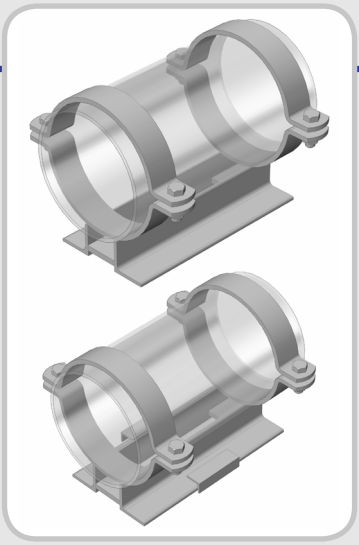

uninsulated pipe carriages

slide support type WGL DN 200 - 500
S235JR
product group discount: 32130

guide support type WFL DN 200 - 500
S235JR
product group discount: 32131

fix support type WFP DN 200 - 500
S235JR
product group discount: 32132

item number	designation	price Euro	price per
32130	WGL 01 204 50	8.503,00	100
32131	WGL 01 220 50	8.756,00	100
32132	WGL 01 254 50	9.334,00	100
32133	WGL 01 273 50	9.391,00	100
32134	WGL 01 305 50	9.785,00	100
32135	WGL 01 324 50	9.836,00	100
32136	WGL 01 356 50	10.094,00	100
32137	WGL 01 407 50	15.035,00	100
32138	WGL 01 457 50	16.371,00	100
32139	WGL 01 508 50	16.755,00	100

item number	designation	price Euro	price per
32160	WFL 01 204 50	8.658,00	100
32161	WFL 01 220 50	8.910,00	100
32162	WFL 01 254 50	9.488,00	100
32163	WFL 01 273 50	9.545,00	100
32164	WFL 01 305 50	9.940,00	100
32165	WFL 01 324 50	9.990,00	100
32166	WFL 01 356 50	10.248,00	100
32167	WFL 01 407 50	15.189,00	100
32168	WFL 01 457 50	16.525,00	100
32169	WFL 01 508 50	16.910,00	100

item number	designation	price Euro	price per
32190	WFP 01 204 50	8.503,00	100
32191	WFP 01 220 50	8.756,00	100
32192	WFP 01 254 50	9.334,00	100
32193	WFP 01 273 50	9.391,00	100
32194	WFP 01 305 50	9.785,00	100
32195	WFP 01 324 50	9.836,00	100
32196	WFP 01 356 50	10.094,00	100
32197	WFP 01 407 50	15.035,00	100
32198	WFP 01 457 50	16.371,00	100
32199	WFP 01 508 50	16.755,00	100

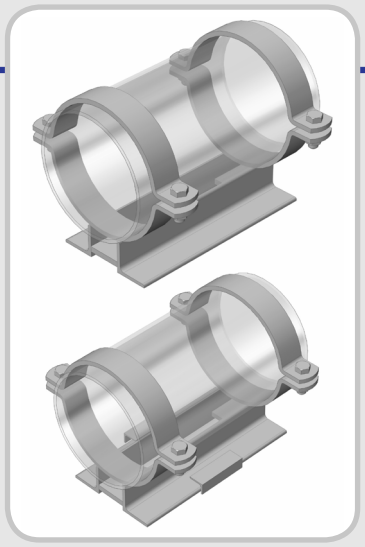

uninsulated pipe carriages

slide support type WGL DN 200 - 500

1.4301, 1.4571 All prices without alloy surcharge.

product group discount: 32101, 32104

guide support type WFL DN 200 - 500

1.4301, 1.4571 All prices without alloy surcharge.

product group discount: 32102, 32105

fix support type WFP DN 200 - 500

1.4301, 1.4571 All prices without alloy surcharge.

product group discount: 32103, 32106

item number	designation	price Euro	price per
30719	WGL 05 204 50	20.664,00	100
30720	WGL 05 220 50	21.824,00	100
30721	WGL 05 254 50	26.616,00	100
30722	WGL 05 273 50	27.196,00	100
30723	WGL 05 305 50	29.684,00	100
30724	WGL 05 324 50	30.264,00	100
30725	WGL 05 356 50	32.202,00	100
30726	WGL 05 407 50	49.494,00	100
32310	WGL 05 457 50	52.500,00	100
30727	WGL 05 508 50	55.886,00	100

item number	designation	price Euro	price per
32280	WGL 06 204 50	22.650,00	100
32281	WGL 06 220 50	23.886,00	100
32282	WGL 06 254 50	29.216,00	100
32283	WGL 06 273 50	29.914,00	100
32284	WGL 06 305 50	32.884,00	100
32285	WGL 06 324 50	33.616,00	100
32286	WGL 06 356 50	35.802,00	100
32287	WGL 06 407 50	55.094,00	100
32307	WGL 06 457 50	58.000,00	100
32288	WGL 06 508 50	62.286,00	100

item number	designation	price Euro	price per
30728	WFL 05 204 50	21.122,00	100
30729	WFL 05 220 50	22.282,00	100
30730	WFL 05 254 50	27.074,00	100
30731	WFL 05 273 50	27.654,00	100
30732	WFL 05 305 50	30.142,00	100
30733	WFL 05 324 50	30.722,00	100
30734	WFL 05 356 50	32.660,00	100
30735	WFL 05 407 50	49.950,00	100
32311	WFL 05 457 50	52.980,00	100
30736	WFL 05 508 50	56.344,00	100

item number	designation	price Euro	price per
32289	WFL 06 204 50	23.108,00	100
32290	WFL 06 220 50	24.282,00	100
32291	WFL 06 254 50	29.674,00	100
32292	WFL 06 273 50	30.354,00	100
32293	WFL 06 305 50	33.342,00	100
32294	WFL 06 324 50	34.074,00	100
32295	WFL 06 356 50	36.260,00	100
32296	WFL 06 407 50	55.550,00	100
32308	WFL 06 457 50	58.458,00	100
32297	WFL 06 508 50	62.744,00	100

item number	designation	price Euro	price per
30737	WFP 05 204 50	20.664,00	100
30738	WFP 05 220 50	21.824,00	100
30739	WFP 05 254 50	26.616,00	100
30740	WFP 05 273 50	27.196,00	100
30741	WFP 05 305 50	29.684,00	100
30742	WFP 05 324 50	30.264,00	100
30743	WFP 05 356 50	32.202,00	100
30744	WFP 05 407 50	49.494,00	100
32312	WFP 05 457 50	52.500,00	100
30745	WFP 05 508 50	55.886,00	100

item number	designation	price Euro	price per
32298	WFP 06 204 50	22.650,00	100
32299	WFP 06 220 50	23.886,00	100
32300	WFP 06 254 50	29.216,00	100
32301	WFP 06 273 50	29.914,00	100
32302	WFP 06 305 50	32.884,00	100
32303	WFP 06 324 50	33.616,00	100
32304	WFP 06 356 50	35.802,00	100
32305	WFP 06 407 50	55.094,00	100
32309	WFP 06 457 50	58.000,00	100
32306	WFP 06 508 50	62.286,00	100

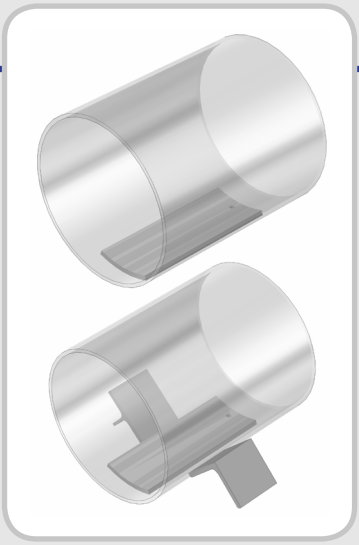

pipe slide - slide support type SBG DN 200 - 1000

S235JR

product group discount: 32140

pipe slide - guide support type SBF DN 200 - 1000

S235JR

product group discount: 32141

item number	designation	price Euro	price per
30806	SBG 01 324	3.236,00	100
30807	SBG 01 356	3.296,00	100
30808	SBG 01 407	3.388,00	100
30809	SBG 01 508	3.602,00	100
30810	SBG 01 610	3.784,00	100
30811	SBG 01 712	4.608,00	100
30812	SBG 01 813	5.158,00	100
30813	SBG 01 915	5.464,00	100
30814	SBG 01 1016	6.196,00	100

item number	designation	price Euro	price per
30815	SBF 01 324	3.998,00	100
30816	SBF 01 356	4.090,00	100
30817	SBF 01 407	4.762,00	100
30818	SBF 01 508	4.976,00	100
30819	SBF 01 610	8.852,00	100
30820	SBF 01 712	9.890,00	100
30821	SBF 01 813	12.666,00	100
30822	SBF 01 915	12.972,00	100
30823	SBF 01 1016	13.704,00	100

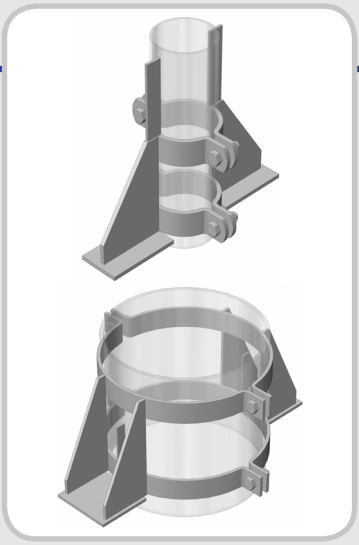

support for vertical piping type TP DN 15 - 1000

S235JR

product group discount: 9026

item number	designation	price Euro	price per
30900	TP 01 22	7.176,00	100
30901	TP 01 27	7.180,00	100
30902	TP 01 34	7.195,00	100
30903	TP 01 43	7.197,00	100
30904	TP 01 49	7.206,00	100
30905	TP 01 53	7.300,00	100
30906	TP 01 61	7.414,00	100
30907	TP 01 68	7.471,00	100
30910	TP 01 77	7.489,00	100
30911	TP 01 83	7.524,00	100
30912	TP 01 89	7.529,00	100
30913	TP 01 104	8.181,00	100
30914	TP 01 108	8.185,00	100
30915	TP 01 115	8.200,00	100
30916	TP 01 129	8.260,00	100
30917	TP 01 133	8.271,00	100
30918	TP 01 140	8.286,00	100
30919	TP 01 154	8.400,00	100
30920	TP 01 159	8.418,00	100
30921	TP 01 169	8.539,00	100
30922	TP 01 191	19.374,00	100
30923	TP 01 204	19.400,00	100
30924	TP 01 220	19.584,00	100
30925	TP 01 229	19.700,00	100
30926	TP 01 254	19.809,00	100
30927	TP 01 273	20.054,00	100
30928	TP 01 305	20.297,00	100
30929	TP 01 324	20.350,00	100
30930	TP 01 356	20.595,00	100
30931	TP 01 407	26.551,00	100
30932	TP 01 457	27.886,00	100
30933	TP 01 508	28.132,00	100
30934	TP 01 610	36.672,00	100
30935	TP 01 712	37.901,00	100
30936	TP 01 813	40.270,00	100
30937	TP 01 915	42.285,00	100
30938	TP 01 1016	43.070,00	100

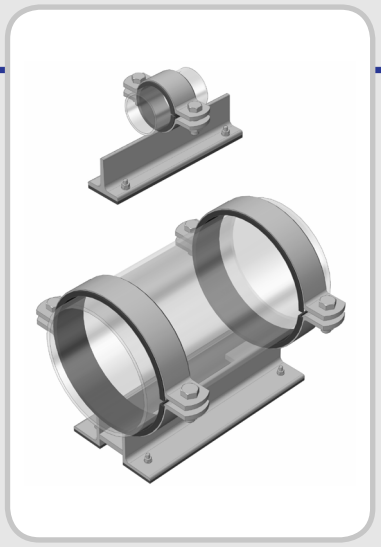

pipe carriage slide support type GL PE DN 50 - 600

S235JR

product group discount: 9033

item number	designation	price Euro	price per
92200	GL PE 01 63	6.881,00	100
92201	GL PE 01 75	7.050,00	100
92202	GL PE 01 90	7.055,00	100
92203	GL PE 01 110	9.468,00	100
92205	GL PE 01 140	9.760,00	100
92206	GL PE 01 160	10.016,00	100
92209	GL PE 01 225	20.397,00	100
92211	GL PE 01 280	21.766,00	100
92212	GL PE 01 315	21.930,00	100
92214	GL PE 01 400	31.646,00	100
92216	GL PE 01 500	35.960,00	100
92218	GL PE 01 630	37.561,00	100

pipe carriage guide support type FL PE DN 50 - 600

S235JR

product group discount: 9034

item number	designation	price Euro	price per
92057	FL PE 01 63	3.357,00	100
92058	FL PE 01 75	3.393,00	100
92059	FL PE 01 90	3.432,00	100
92060	FL PE 01 110	3.786,00	100
92062	FL PE 01 140	17.120,00	100
92063	FL PE 01 160	17.505,00	100
92066	FL PE 01 225	18.306,00	100
92068	FL PE 01 280	21.576,00	100
92069	FL PE 01 315	21.904,00	100
92071	FL PE 01 400	23.270,00	100
92073	FL PE 01 500	24.050,00	100
92075	FL PE 01 630	26.210,00	100

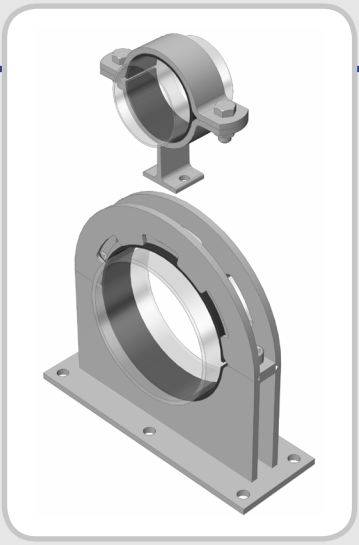

pipe carriage fix support type FP PE DN 50 - 600

S235JR

product group discount: 9035

item number	designation	price Euro	price per
92038	FP PE 01 63	3.342,00	100
92039	FP PE 01 75	3.363,00	100
92040	FP PE 01 90	3.411,00	100
92041	FP PE 01 110	3.726,00	100
92043	FP PE 01 140	41.800,00	100
92044	FP PE 01 160	45.600,00	100
92047	FP PE 01 225	64.908,00	100
92049	FP PE 01 280	70.824,00	100
92050	FP PE 01 315	98.800,00	100
92052	FP PE 01 400	182.400,00	100
92054	FP PE 01 500	231.000,00	100
92056	FP PE 01 630	296.800,00	100

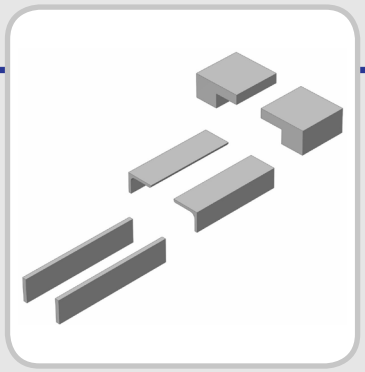

guide angle type FW DN 15 - 1000
S235JR
1.4301 All prices without alloy surcharge.
product group discount: 3270

guide bracket type FK DN 15 - 1000
S235JR
product group discount: 3270

guide rail type FL DN 15 - 1000
S235JR
product group discount: 3270

item number	designation	price Euro	price per
60001	FW 01 A DN 15 - DN 500	132,00	100
60002	FW 01 B DN 600 - DN 1000	688,00	100

item number	designation	price Euro	price per
60003	FW 05 A	336,00	100

item number	designation	price Euro	price per
60074	FK 01 A	500,00	100

item number	designation	price Euro	price per
60200	FL 01 A DN 15 - DN 500	126,00	100
60201	FL 01 B DN 600 - DN 1000	344,00	100

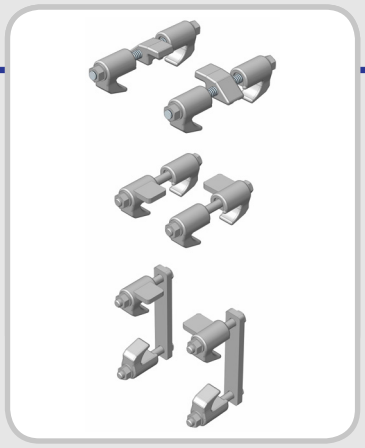

beam clamp for HEA-HEB
hot dip galvanized
product group discount: 3271

beam clamp for IPE
hot dip galvanized
product group discount: 3271

beam clamp for UNP
hot dip galvanized
product group discount: 3271

item number	designation	price Euro	price per
60076	TKS 01 M12 hdg HEA-HEB beam 100 - 120 mm	2.553,00	100
60077	TKS 01 M12 hdg HEA-HEB beam 140 - 160 mm	2.580,00	100
60078	TKS 01 M12 hdg HEA-HEB beam 180 - 200 mm	2.608,00	100

item number	designation	price Euro	price per
60100	TKS 01 M12 hdg IPE beam 140 - 180 mm	3.735,00	100

item number	designation	price Euro	price per
60101	TKS 01 M12 hdg UNP 80 upright	5.796,00	100
60102	TKS 01 M12 hdg UNP 100 upright	5.835,00	100
60103	TKS 01 M12 hdg UNP 120 upright	5.859,00	100
60104	TKS 01 M12 hdg UNP 140 upright	5.961,00	100
60105	TKS 01 M12 hdg UNP 160 upright	5.997,00	100
60106	TKS 01 M12 hdg UNP 180 upright	6.162,00	100
60107	TKS 01 M12 hdg UNP 200 upright	6.198,00	100

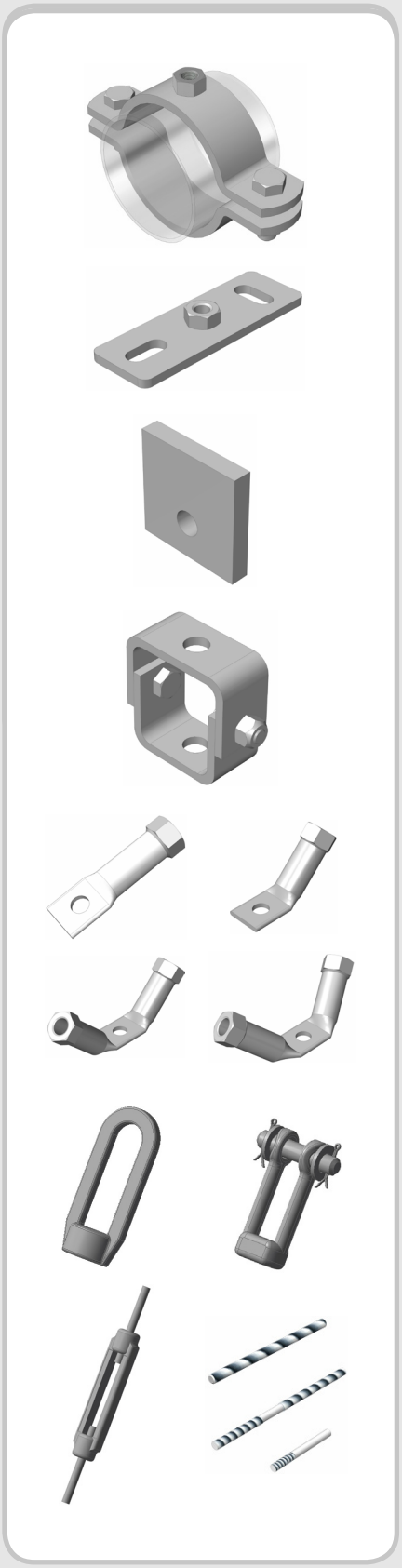

pipe hangers

pipe clamp type HSM
pipe clamp type HSL
base plate
welding plate
vario hanger
socket tubes
thread bolt
thread eyelet
turnbuckle
thread rod
pull rod
weld-on end

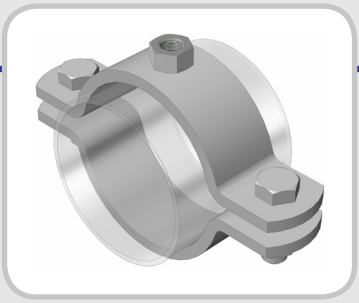

pipe hangers

For the order please provide the mandatory order data indicated in the technical drawings or the order number of the price sheets.

Pipe hangers are used for the suspension of pipes. The various applications are shown on the following pages.

Pipe clamps with connecting nuts. The pipe clamp used (DIN 3567-A or similar) is welded with a nut. Instead of the nut a pipe coupling can be used. The nut/pipe coupling is all-side welded. Manufacturing see material table. Scope of delivery includes screws and nuts. These parts can be of course galvanized as well as hot dip galvanized. For hot-dip galvanization please contact us.

Welding plates are made of flat steel or metal sheet. Manufacturing see material table. Categorically any corrosion protection can be applied. We ask you to inform us regarding the coating system. These parts can be galvanized or hot-dip galvanized. For hot dip galvanisation please contact us.

Base plates are made of flat steel and are welded with a nut. Instead of the nut a pipe coupling can be used. The nut/pipe coupling is all side-welded. Manufacturing see material table. These parts can be galvanized or hot dip galvanized. For hot dip galvanization please contact us.

All clamps identified with * comply with standard DIN 3567-A/B, and those without the identifier comply with standard similar to DIN 3567-A/B.

material:

material	internal material specification	max. operation temperature	screw quality	nut quality
S235JR	01	300 °C	8.8	8
1.4301 (A2)	05		A2	A2
1.4571 (A4)	06		A4	A4

forging parts	C22.8
turnbuckle	steel
thread rod	FKL 4, A2, A4
pull rod	ST52-3
weld-on end	FKL 3.6
extension nut	FKL 8, A4

norms: see attachment 4.0 and 4.1

applications

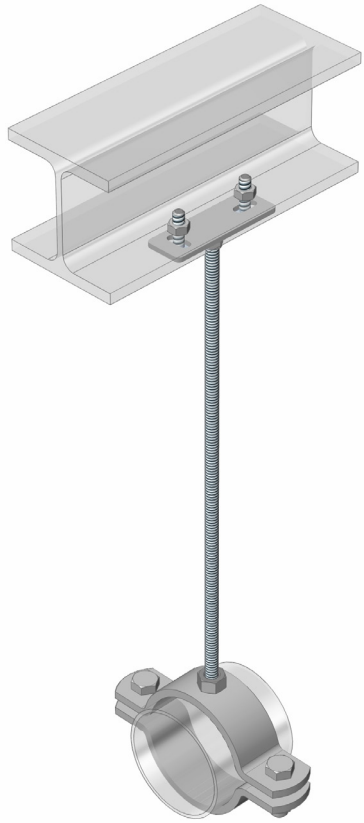

pipe hanger consisting of:
substructure provided by customer
base plate
lock nut
thread rod
clamp type HSM, HSL

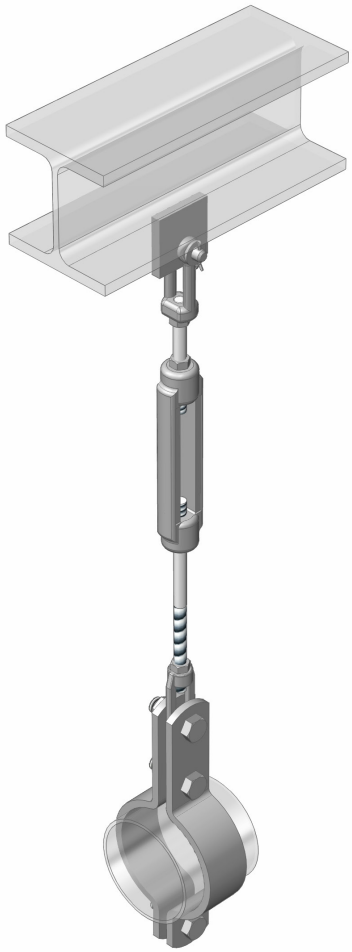

pipe hanger consisting of:
substructure provided by customer
welding plate
thread bolt
turnbuckle
pull rod
lock nut
thread eyelet
clamp type SMH

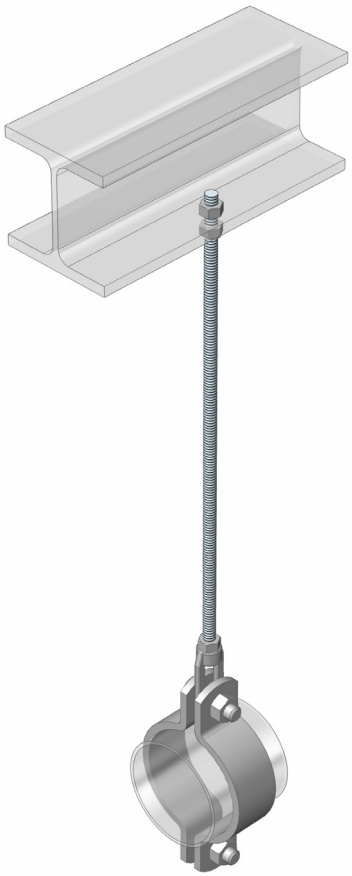

pipe hanger consisting of:
substructure provided by customer
thread rod with nut
lock nut
thread eyelet
clamp type SM

applications hanger items

single suspension with lateral support from tiltet ceiling
vario hanger complete
nut
thread rod
lock nut
clamp type HSM, HSL

lateral support:
base plate
lock nut
thread rod
socket tube ÖM

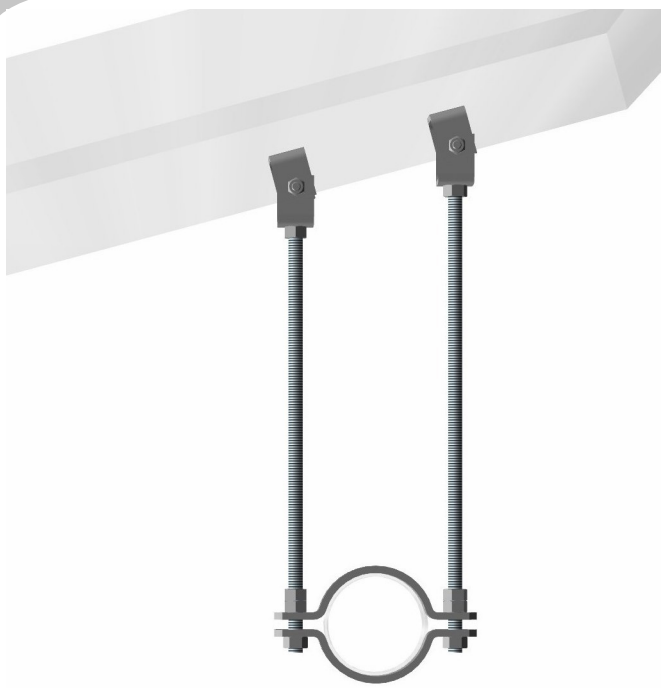

double suspension from tiltet ceiling:
vario hanger complete
nut
thread rod
lock nut
clamp type SM, SL

applications hanger items

suspension with stiffening on straight ceiling:
socket tube ÖM
thread rod
lock not
socket tube double ÖMD
clamp type HSM, HSL

lateral support:
base plate
thread rod
lock nut

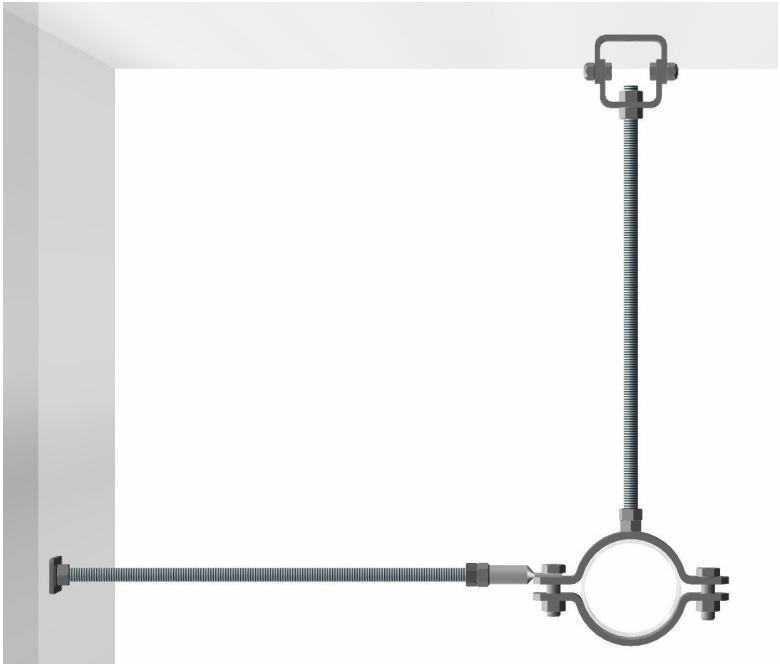

single suspension from straight ceiling:
vario hanger complete
nut
thread rod
lock nut
clamp type HSM, HSL

lateral support:
base plate
lock nut
thread rod
socket tube ÖM

applications hanger items

windbracing on a straight ceiling:
socket tube ÖM
thread rod
lock nut
socket tube double ÖMD
clamp type HSM, HSL

lateral support:
base plate
thread rod
lock nut

pipe clamp type HSM

DN 15 - 350

DIN 3567-A with connecting nut (Can also be delivered with pipe coupling 1/2" - 1".)

All clamps identified with * comply with standard DIN 3567-A/B, and those without the identifier comply with standard similar to DIN 3567-A/B.

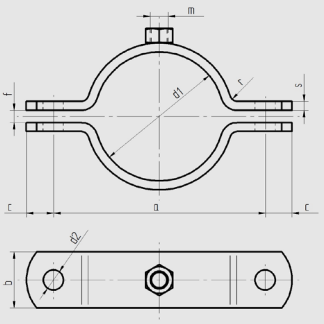

order example

type	material see 4.0.1	pipe diameter d1	extra	extra surface protection
HSM	01	22		

d1	nominal diameter	a	c	d2	f	r	flat steel bxs	screws used	m	weight kg/pair	Fz (kN)
22	15	51	15	11,5	7	4	30x5	10x35	10	0,19	5,5
27*	20	66	15	11,5	7	4	30x5	10x35	10	0,24	4,5
34*	25	72	15	11,5	7	4	30x5	10x35	10	0,26	3,5
43*	32	82	15	11,5	7	4	30x5	10x35	10	0,30	2,6
49*	40	88	15	11,5	7	4	30x5	10x35	10	0,31	2,2
53	50	100	18	14	9	6	40x6	12x40	12	0,55	4,1
61*	50	108	18	14	9	6	40x6	12x40	12	0,58	3,4
68	65	115	18	14	9	6	40x6	12x40	12	0,61	3,0
77*	65	122	18	14	9	6	40x6	12x40	12	0,66	2,5
83	80	130	18	14	9	6	40x6	12x40	12	0,71	2,3
89*	80	136	18	14	9	6	40x6	12x40	12	0,75	2,1
108*	100	171	24	18	11	6	50x8	16x50	16	1,60	3,9
115*	100	178	24	18	11	6	50x8	16x50	16	1,63	3,6
133*	125	197	24	18	11	6	50x8	16x50	16	1,78	3,0
140*	125	204	24	18	11	6	50x8	16x50	16	1,83	2,8
159*	150	222	24	18	11	6	50x8	16x50	16	2,08	2,4
169*	150	232	24	18	11	6	50x8	16x50	16	2,10	2,2
191*	175	255	24	18	11	6	50x8	16x50	16	2,60	1,9
204	200	268	24	18	11	6	50x8	16x50	16	2,61	1,7
220*	200	284	24	18	11	6	50x8	16x50	16	2,64	1,6
254	250	329	30	23	14	8	60x8	20x60	20	3,90	1,6
273*	250	348	30	23	14	8	60x8	20x60	20	3,91	1,5
305	300	379	30	23	14	8	60x8	20x60	20	4,44	1,3
324*	300	398	30	23	14	8	60x8	20x60	20	4,45	1,2
356	350	432	30	23	14	8	60x8	20x60	20	5,09	1,1

Actual measures of the pipe supports depend on the individual profile tolerance.
Basis for the calculation of the load values can be found on page 2.0, 2.1 and 2.2. Subject to technical modifications.

A-4614 Marchtrenk | Linzer Straße 141 | tel. 0043 7243 / 58 222 | fax 0043 7243 / 58 222 800 | e-mail: office@hammerschmid.at | www.hammerschmid.at

pipe clamp type HSL

NW 15 - 400

similar to DIN 3567-A with connecting nut

(Can also be delivered with pipe coupling 1/2" - 1".)

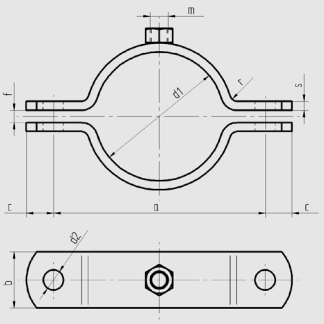

order example

type	material see 4.0.1	pipe diameter d1	extra	extra surface protection
HSL	05	22		

d1	nominal diameter	a	c	d2	f	r	flat steel bxs	screws used	m	weight kg/pair	Fz (kN)
22	15	51	15	11,5	7	4	30x4	10x35	10	0,25	2,71
27	20	57	15	11,5	7	4	30x4	10x35	10	0,26	2,24
34	25	64	15	11,5	7	4	30x4	10x35	10	0,28	1,85
43	32	73	15	11,5	7	4	30x4	10x35	10	0,30	1,39
49	40	79	15	11,5	7	4	30x4	10x35	10	0,33	1,19
53	50	83	15	11,5	7	4	30x4	10x35	12	0,34	1,12
61	50	91	15	11,5	7	4	30x4	10x35	12	0,37	0,92
68	65	98	15	11,5	7	4	30x4	10x35	12	0,39	0,79
77	65	107	15	11,5	7	4	30x4	10x35	12	0,41	0,66
83	80	113	15	11,5	7	4	30x4	10x35	12	0,43	0,59
89	80	119	15	11,5	7	4	30x4	10x35	12	0,45	0,53
104	100	150	18	14	9	6	40x5	12x40	16	0,88	1,06
108	100	154	18	14	9	6	40x5	12x40	16	0,88	0,99
115	100	161	18	14	9	6	40x5	12x40	16	0,91	0,92
129	125	175	18	14	9	6	40x5	12x40	16	0,99	0,79
133	125	179	18	14	9	6	40x5	12x40	16	0,99	0,79
140	125	186	18	14	9	6	40x5	12x40	16	1,03	0,73
154	125	200	18	14	9	6	40x5	12x40	16	1,12	0,66
159	150	205	18	14	9	6	40x5	12x40	16	1,12	0,66
169	150	215	18	14	9	6	40x5	12x40	16	1,18	0,59
191	175	237	18	14	9	6	40x5	12x40	16	1,29	0,53
204	200	250	18	14	9	6	40x5	12x40	16	1,36	0,53
220	200	266	18	14	9	6	40x5	12x40	16	1,45	0,46
229	200	275	18	14	9	6	40x5	12x40	16	1,46	0,46
254	250	320	24	18	11	6	50x5	16x50	20	2,30	0,53
273	250	339	24	18	11	6	50x5	16x50	20	2,42	0,53
305	300	371	24	18	11	6	50x5	16x50	20	2,63	0,46
324	300	390	24	18	11	6	50x5	16x50	20	2,73	0,46
356	350	422	24	18	11	6	50x5	16x50	20	3,00	0,40
407	400	472	24	18	11	6	50x5	16x50	20	4,05	0,33

Actual measures of the pipe supports depend on the individual profile tolerance.

Basis for the calculation of the load values can be found on page 2.0, 2.1 and 2.2. Subject to technical modifications.

A-4614 Marchtrenk | Linzer Straße 141 | tel. 0043 7243 / 58 222 | fax 0043 7243 / 58 222 800 | e-mail: office@hammerschmid.at | www.hammerschmid.at

base plate type HD3

with connecting nut

(Can also be delivered with pipe coupling 1/2" - 1".)

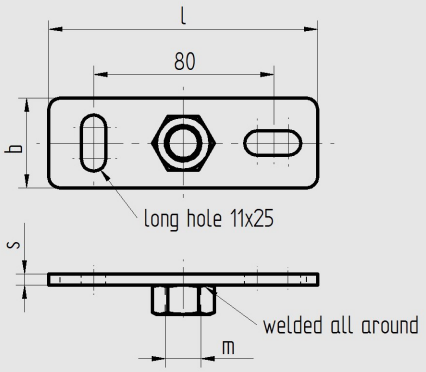

order example

type	material see 4.0.1	m	extra surface protection
HD3	01	12	GAL

m	l	b	s	slot hole	Fz (kN)
10	120	40	5	11x25	1,70
12	120	40	5	11x25	1,70
16	120	40	5	11x25	1,70

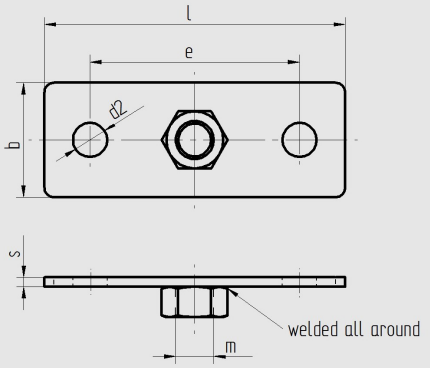

m	l	b	s	d2	e	Fz (kN)
20	158	60	8	18	110	4,7

Actual measures of the pipe supports depend on the individual profile tolerance.
Basis for the calculation of the load values can be found on page 2.0, 2.1 and 2.2. Subject to technical modifications.

welding plate type AL

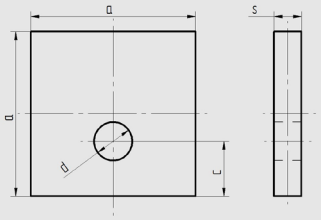

order example

type	material see 4.0.1	nominal size a	extra	extra surface protection
AL	01	60		

nominal size a	c	d	flat steel bxs	weight kg/pc.
60	20	14	60x10	0,27
80	30	18	80x12	0,58
100	35	22	100x15	1,13
120	40	26	120x15	1,63
150	45	33	150x20	3,40

Actual measures of the pipe supports depend on the individual profile tolerance.
Basis for the calculation of the load values can be found on page 2.0, 2.1 and 2.2. Subject to technical modifications.

vario hanger type VB

complete; pre-assembled with screws and lock nut

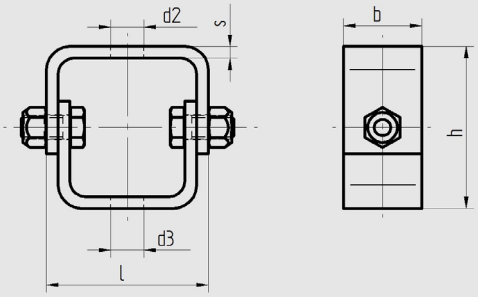

order example

type	material see 4.0.1	bxs	d2	d3	extra surface protection
VB	06	40x4	13	17	

bxs	d2	d3	h	l	weight kg/pc.
40x4	13	13	85	83	0,45
40x4	13	17	85	83	0,45
40x4	17	17	85	83	0,45
40x6	13	13	85	83	0,64
40x6	13	17	85	83	0,64
40x6	17	17	85	83	0,64

Actual measures of the pipe supports depend on the individual profile tolerance.
Basis for the calculation of the load values can be found on page 2.0, 2.1 and 2.2. Subject to technical modifications.

socket tubes
welded

order example

type	material see 4.0.1	m	extra surface protection
ÖM	06	12	

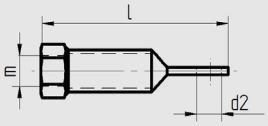

m	l	d2	weight kg/pc.
12	100	14	0,13
16	102	18	0,14
20	125	23	0,32

order example

type	material see 4.0.1	m	angle 1	extra surface protection
ÖM	06	12	45°	

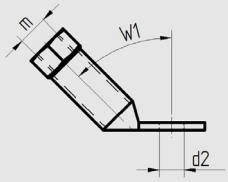

m	W1	d2	weight kg/pc.
12	45°	14	0,13
16	45°	18	0,14
20	45°	23	0,37

order example

type	material see 4.0.1	m	angle 1	extra surface protection
ÖMD	06	12	45°	

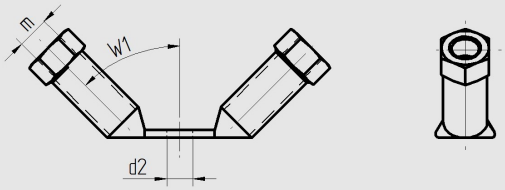

m	W1	d2	weight kg/pc.
12	45°	14	0,20
16	45°	18	0,23
20	45°	23	0,60

order example

type	material see 4.0.1	m	angle 1	angle 2	extra surface protection
ÖMD	06	12	45°	18°	

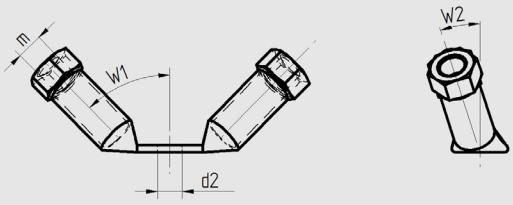

m	W1	W2	d2	weight kg/pc.
12	45°	18°	14	0,20
16	45°	18°	18	0,23
20	45°	18°	23	0,65

Actual measures of the pipe supports depend on the individual profile tolerance.
Basis for the calculation of the load values can be found on page 2.0, 2.1 and 2.2. Subject to technical modifications.

thread bolt
drop forged

order example

type	material see 4.0.1	m	extra surface protection
thread bolt	C22.8	12	yellow chromated

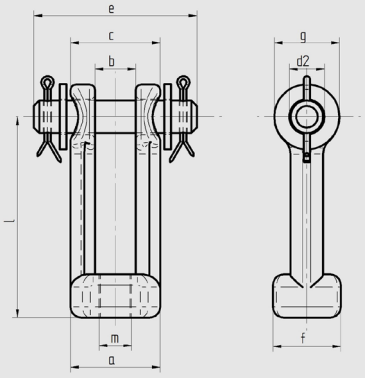

m	l	a	b	c	e	f	d2	g	weight kg/pc.
12	70	32,5	12	34	54	25	12	24	0,20
16	80	42	17	44	65	33	16	32	0,40
20	90	55	20	57	80	40	20	46	1,00
24	110	65	22	68	96	46	24	53	1,60
30	130	72	27	80	118	51	33	64	2,70

thread eyelet
drop forged

order example

type	material see 4.0.1	m	extra surface protection
thread eyelet	C22.8	12	yellow chromated

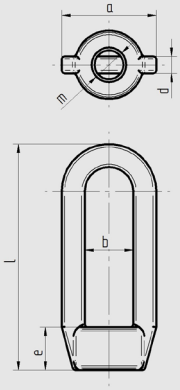

m	l	a	b	d	e	weight kg/pc.
12	79	33	17	6	15	0,10
16	101	44	25	10	20	0,20
20	125	59	29	10	25	0,40
24	154	72	35	15	30	0,80
30	181	88	42	17	37	1,20

turnbuckle
DIN 1480-AE

order example

type	material see 4.0.1	m	extra surface protection
turnbuckle	steel	12	

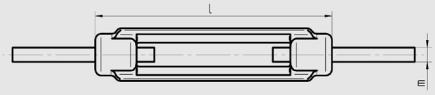

m	l	weight kg/pc.
10	125	0,22
12	125	0,34
16	170	0,95
20	200	1,59
24	255	2,62

Actual measures of the pipe supports depend on the individual profile tolerance.
Basis for the calculation of the load values can be found on page 2.0, 2.1 and 2.2. Subject to technical modifications.

thread rod

DIN 976
metrical right-hand thread

order example

type	material see 4.0.1	m	l	extra surface protection
thread rod		10	1000	

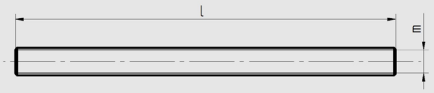

m	l
10	1000
12	1000
16	1000
20	1000
24	1000

m	l
10	3000
12	3000
16	3000
20	3000
24	3000

pull rod

galvanized
metrical right-hand and left-hand thread

order example

type	material see 4.0.1	m	extra surface protection
pull rod		12	GAL

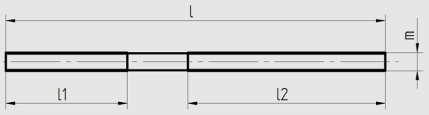

m	l	l1 right	l2 left	weight kg/pc.
12	250	80	130	0,20
16	250	80	130	0,30
20	250	80	130	0,50
24	350	120	190	1,00
30	350	120	190	1,60

weld-on end

DIN 525
metrical right-hand thread

order example

type	material see 4.0.1	m	extra surface protection
weld-on end		12	

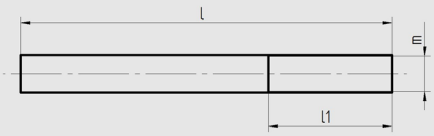

m	l	l1 right
10	150	45
12	172	55
16	192	65
20	212	75
24	232	85

Actual measures of the pipe supports depend on the individual profile tolerance.
Basis for the calculation of the load values can be found on page 2.0, 2.1 and 2.2. Subject to technical modifications.

extension nut

DIN 6334
metrical right-hand thread

order example

type	material see 4.0.1	m	extra surface protection
extension nut	A4	10	

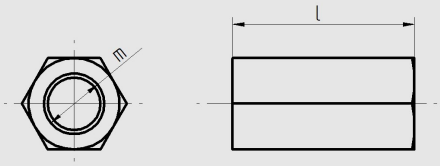

m	l
10	30
12	36
16	48
20	60
24	72

Actual measures of the pipe supports depend on the individual profile tolerance.
Basis for the calculation of the load values can be found on page 2.0, 2.1 and 2.2. Subject to technical modifications.

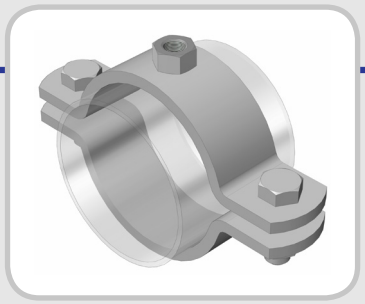

pipe clamp type HSM DN 15 - 350

S235JR

product group discount: 4210

galvanized

product group discount: 4211

item number	designation	price Euro	price per
50009	HSM 01 22	848,00	100
50010	HSM 01 27	880,00	100
50011	HSM 01 34	896,00	100
50012	HSM 01 43	896,00	100
50013	HSM 01 49	896,00	100
50014	HSM 01 53	990,00	100
50015	HSM 01 61	990,00	100
50016	HSM 01 68	1.006,00	100
50017	HSM 01 77	1.006,00	100
50018	HSM 01 83	1.024,00	100
50019	HSM 01 89	1.024,00	100
50020	HSM 01 108	1.352,00	100
50021	HSM 01 115	1.368,00	100
50022	HSM 01 133	1.400,00	100
50023	HSM 01 140	1.414,00	100
50024	HSM 01 159	1.446,00	100
50025	HSM 01 169	1.476,00	100
50026	HSM 01 191	1.508,00	100
50027	HSM 01 204	1.540,00	100
50028	HSM 01 220	1.588,00	100
50029	HSM 01 254	2.186,00	100
50030	HSM 01 273	2.216,00	100
50031	HSM 01 305	2.326,00	100
50032	HSM 01 324	2.342,00	100
50033	HSM 01 356	2.438,00	100

item number	designation	price Euro	price per
50049	HSM 01 22 galv.	916,00	100
50050	HSM 01 27 galv.	962,00	100
50051	HSM 01 34 galv.	976,00	100
50052	HSM 01 43 galv.	992,00	100
50053	HSM 01 49 galv.	992,00	100
50054	HSM 01 53 galv.	1.190,00	100
50055	HSM 01 61 galv.	1.190,00	100
50056	HSM 01 68 galv.	1.236,00	100
50057	HSM 01 77 galv.	1.236,00	100
50058	HSM 01 83 galv.	1.282,00	100
50059	HSM 01 89 galv.	1.282,00	100
50060	HSM 01 108 galv.	1.908,00	100
50061	HSM 01 115 galv.	1.954,00	100
50062	HSM 01 133 galv.	2.030,00	100
50063	HSM 01 140 galv.	2.076,00	100
50064	HSM 01 159 galv.	2.152,00	100
50065	HSM 01 169 galv.	2.214,00	100
50066	HSM 01 191 galv.	2.306,00	100
50067	HSM 01 204 galv.	2.380,00	100
50068	HSM 01 220 galv.	2.488,00	100
50069	HSM 01 254 galv.	3.480,00	100
50070	HSM 01 273 galv.	3.588,00	100
50071	HSM 01 305 galv.	3.800,00	100
50072	HSM 01 324 galv.	3.892,00	100
50073	HSM 01 356 galv.	4.106,00	100

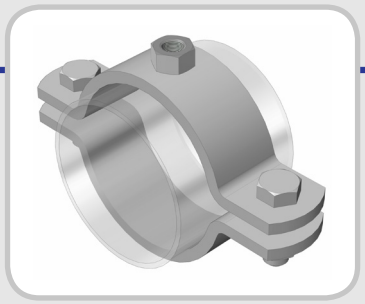

pipe clamp type HSL DN 15 - 400

1.4301 All prices without alloy surcharge.
product group discount: 4260
1.4571 All prices without alloy surcharge.
product group discount: 4261

item number	designation	price Euro	price per
50086	HSL 05 22	921,00	100
50087	HSL 05 27	942,00	100
50088	HSL 05 34	963,00	100
50089	HSL 05 43	993,00	100
50090	HSL 05 49	1.011,00	100
50091	HSL 05 53	1.035,00	100
50092	HSL 05 61	1.062,00	100
50093	HSL 05 68	1.083,00	100
50094	HSL 05 77	1.113,00	100
50095	HSL 05 83	1.131,00	100
50096	HSL 05 89	1.152,00	100
50097	HSL 05 104	1.689,00	100
50098	HSL 05 108	1.710,00	100
50099	HSL 05 115	1.749,00	100
50100	HSL 05 129	1.818,00	100
50101	HSL 05 133	1.845,00	100
50102	HSL 05 140	1.884,00	100
50103	HSL 05 154	1.959,00	100
50104	HSL 05 159	1.986,00	100
50105	HSL 05 169	2.040,00	100
50106	HSL 05 191	3.051,00	100
50107	HSL 05 204	3.060,00	100
50108	HSL 05 220	3.327,00	100
50109	HSL 05 229	3.615,00	100
50110	HSL 05 254	5.607,00	100
50111	HSL 05 273	5.670,00	100
50112	HSL 05 305	6.408,00	100
50113	HSL 05 324	6.498,00	100
50114	HSL 05 356	6.762,00	100
50115	HSL 05 407	8.010,00	100

item number	designation	price Euro	price per
50120	HSL 06 22	1.413,00	100
50121	HSL 06 27	1.464,00	100
50122	HSL 06 34	1.521,00	100
50123	HSL 06 43	1.614,00	100
50124	HSL 06 49	1.656,00	100
50125	HSL 06 53	1.683,00	100
50126	HSL 06 61	1.728,00	100
50127	HSL 06 68	1.884,00	100
50128	HSL 06 77	1.932,00	100
50129	HSL 06 83	1.947,00	100
50130	HSL 06 89	2.043,00	100
50131	HSL 06 104	3.132,00	100
50132	HSL 06 108	3.240,00	100
50133	HSL 06 115	3.273,00	100
50134	HSL 06 129	3.320,00	100
50135	HSL 06 133	3.486,00	100
50136	HSL 06 140	3.690,00	100
50137	HSL 06 154	3.744,00	100
50138	HSL 06 159	3.825,00	100
50139	HSL 06 169	4.074,00	100
50140	HSL 06 191	4.239,00	100
50141	HSL 06 204	4.431,00	100
50142	HSL 06 220	4.665,00	100
50143	HSL 06 229	4.977,00	100
50144	HSL 06 254	8.094,00	100
50145	HSL 06 273	8.190,00	100
50146	HSL 06 305	9.333,00	100
50147	HSL 06 324	9.471,00	100
50148	HSL 06 356	9.882,00	100
50149	HSL 06 407	11.814,00	100

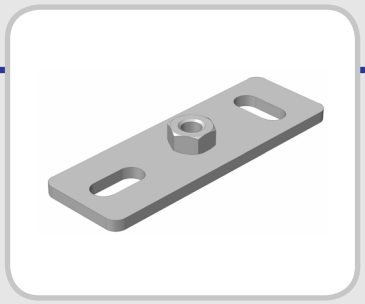

base plate type HD3

S235JR
product group discount: 4250
galvanized
product group discount: 4251
1.4571 All prices without alloy surcharge.
product group discount: 4252

item number	designation	price Euro	price per
50001	HD3 01 10	708,00	100
50002	HD3 01 12	724,00	100
50003	HD3 01 16	754,00	100
50004	HD3 01 20	800,00	100

item number	designation	price Euro	price per
50005	HD3 01 10 galv.	754,00	100
50006	HD3 01 12 galv.	770,00	100
50007	HD3 01 16 galv.	880,00	100
50008	HD3 01 20 galv.	928,00	100

item number	designation	price Euro	price per
50083	HD3 06 10	854,00	100
50084	HD3 06 12	870,00	100
50085	HD3 06 16	980,00	100

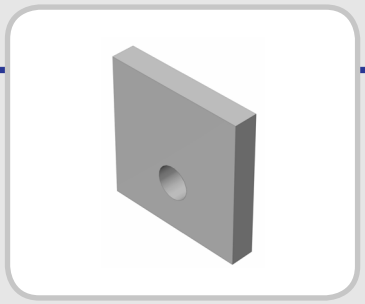

welding plate type AL

S235JR

product group discount: 4220

item number	designation	price Euro	price per
50044	AL 01 60	346,00	100
50045	AL 01 80	412,00	100
50046	AL 01 100	710,00	100
50047	AL 01 120	890,00	100
50048	AL 01 150	2.806,00	100

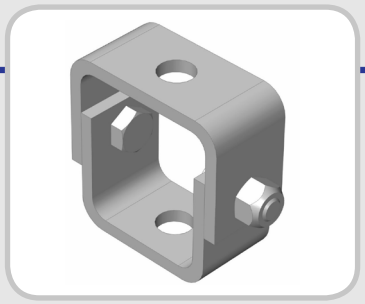

vario hanger

S235JR galvanized
product group discount: 4281
1.4571 All prices without alloy surcharge.
product group discount: 4283

item number	designation	price Euro	price per
50310	VB 01 40/4 drill 13/13 galv.	1.211,00	100
50311	VB 01 40/4 drill 13/17 galv.	1.211,00	100
50312	VB 01 40/4 drill 17/17 galv.	1.211,00	100
50313	VB 01 40/6 drill 13/13 galv.	1.288,00	100
50314	VB 01 40/6 drill 13/17 galv.	1.288,00	100
50315	VB 01 40/6 drill 17/17 galv.	1.288,00	100

item number	designation	price Euro	price per
50200	VB 06 40/4 drill 13/13	1.473,00	100
50201	VB 06 40/4 drill 13/17	1.473,00	100
50202	VB 06 40/4 drill 17/17	1.473,00	100
50203	VB 06 40/6 drill 13/13	1.707,00	100
50204	VB 06 40/6 drill 13/17	1.707,00	100
50205	VB 06 40/6 drill 17/17	1.707,00	100

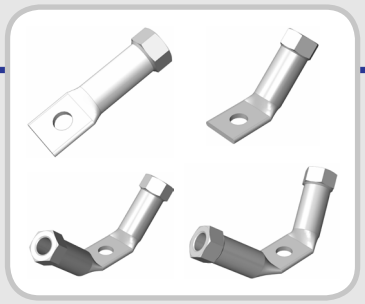

socket tubes

S235JR galvanized
product group discount: 4271
1.4571 All prices without alloy surcharge.
product group discount: 4273

item number	designation	price Euro	price per
50231	ÖM 01 M12 galv.	664,00	100
50232	ÖM 01 M16 galv.	673,00	100
50233	ÖM 01 M20 galv.	757,00	100

item number	designation	price Euro	price per
50236	ÖM 01 M12x45° galv.	664,00	100
50237	ÖM 01 M16x45° galv.	673,00	100
50238	ÖM 01 M20x45° galv.	757,00	100

item number	designation	price Euro	price per
50241	ÖMD 01 M12x45° galv.	1.005,00	100
50242	ÖMD 01 M16x45° galv.	1.022,00	100
50243	ÖMD 01 M20x45° galv.	1.178,00	100

item number	designation	price Euro	price per
50246	ÖMD 01 M12x45°-18° galv.	1.005,00	100
50247	ÖMD 01 M16x45°-18° galv.	1.022,00	100
50248	ÖMD 01 M20x45°-18° galv.	1.178,00	100

item number	designation	price Euro	price per
50271	ÖM 06 M12 A4	865,00	100
50272	ÖM 06 M16 A4	895,00	100
50273	ÖM 06 M20 A4	1.171,00	100

item number	designation	price Euro	price per
50276	ÖM 06 M12x45° A4	865,00	100
50277	ÖM 06 M16x45° A4	895,00	100
50278	ÖM 06 M20x45° A4	1.171,00	100

item number	designation	price Euro	price per
50281	ÖMD 06 M12x45° A4	1.325,00	100
50282	ÖMD 06 M16x45° A4	1.385,00	100
50283	ÖMD 06 M20x45° A4	1.902,00	100

item number	designation	price Euro	price per
50286	ÖMD 06 M12x45°-18° A4	1.325,00	100
50287	ÖMD 06 M16x45°-18° A4	1.385,00	100
50288	ÖMD 06 M20x45°-18° A4	1.902,00	100

thread bolt
yellow chromated
product group discount: 4240

thread eyelet
yellow chromated
product group discount: 4240

turnbuckle
S235JR
product group discount: 4240

item number	designation	price Euro	price per
50039	thread bolt M12 C22.8	1.848,00	100
50040	thread bolt M16 C22.8	2.608,00	100
50041	thread bolt M20 C22.8	3.994,00	100
50042	thread bolt M24 C22.8	6.172,00	100
50043	thread bolt M30 C22.8	10.992,00	100

item number	designation	price Euro	price per
50034	thread eyelet M12 C22.8	1.320,00	100
50035	thread eyelet M16 C22.8	1.652,00	100
50036	thread eyelet M20 C22.8	2.508,00	100
50037	thread eyelet M24 C22.8	4.192,00	100
50038	thread eyelet M30 C22.8	6.108,00	100

item number	designation	price Euro	price per
500039	turnbuckle M10 raw	621,48	100
500040	turnbuckle M12 raw	779,04	100
500041	turnbuckle M16 raw	1.024,96	100
500042	turnbuckle M20 raw	1.575,24	100
500043	turnbuckle M24 raw	2.876,40	100

thread rod

galvanized

1.4301 All prices without alloy surcharge.

1.4571 All prices without alloy surcharge.

product group discount: 4230

item number	designation	price Euro	price per
500083	thread rod M10x1000 FKL4, galv.	159,88	100
500084	thread rod M12x1000 FKL4, galv.	218,00	100
500085	thread rod M16x1000 FKL4, galv.	415,68	100
500086	thread rod M20x1000 FKL4, galv.	715,12	100
500087	thread rod M24x1000 FKL4, galv.	1.023,24	100

item number	designation	price Euro	price per
500088	thread rod M10x3000 FKL4, galv.	569,76	100
500089	thread rod M12x3000 FKL4, galv.	755,80	100
500090	thread rod M16x3000 FKL4, galv.	1.389,52	100
500091	thread rod M20x3000 FKL4, galv.	2.470,88	100
500092	thread rod M24x3000 FKL4, galv.	3.401,08	100

item number	designation	price Euro	price per
500093	thread rod M10x1000 A2	639,52	100
500094	thread rod M12x1000 A2	959,28	100
500095	thread rod M16x1000 A2	1.686,00	100
500096	thread rod M20x1000 A2	2.587,16	100
500097	thread rod M24x1000 A2	3.691,76	100

item number	designation	price Euro	price per
500381	thread rod M10x1000 A4	910,00	100
500382	thread rod M12x1000 A4	1.500,00	100
500383	thread rod M16x1000 A4	2.437,00	100
500384	thread rod M20x1000 A4	5.118,00	100
500385	thread rod M24x1000 A4	5.868,00	100

pull rod
galvanized
product group discount: 4230

weld-on end
S235JR
product group discount: 4230

item number	designation	price Euro	price per
500074	pull rod M12 L/R ST52-3, galv.	412,00	100
500075	pull rod M16 L/R ST52-3, galv.	518,00	100
500076	pull rod M20 L/R ST52-3, galv.	824,00	100
500077	pull rod M24 L/R ST52-3, galv.	1.482,00	100
500078	pull rod M30 L/R ST52-3, galv.	2.076,00	100

item number	designation	price Euro	price per
500056	weld-on end M10 FKL3.6, raw	113,36	100
500057	weld-on end M12 FKL3.6, raw	139,52	100
500058	weld-on end M16 FKL3.6, raw	372,08	100
500059	weld-on end M20 FKL3.6, raw	398,24	100
500060	weld-on end M24 FKL3.6, raw	819,92	100

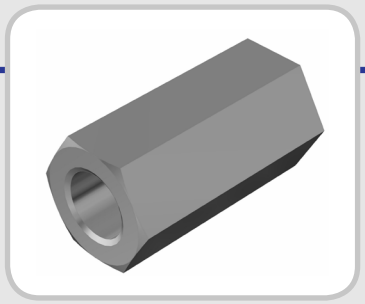

extension nut

S235JR

product group discount: 4230

item number	designation	price Euro	price per
500778	extension nut hexagonal M10 FKL8, galv.	31,00	100
500779	extension nut hexagonal M12 FKL8, galv.	45,00	100
500780	extension nut hexagonal M16 FKL8, galv.	75,00	100
500781	extension nut hexagonal M20 FKL8, galv.	232,00	100
500782	extension nut hexagonal M24 FKL8, galv.	430,00	100

item number	designation	price Euro	price per
500703	extension nut hexagonal M10 A4	125,00	100
500704	extension nut hexagonal M12 A4	206,00	100
500705	extension nut hexagonal M16 A4	337,00	100
500706	extension nut hexagonal M20 A4	846,00	100
500707	extension nut hexagonal M24 A4	1.158,00	100

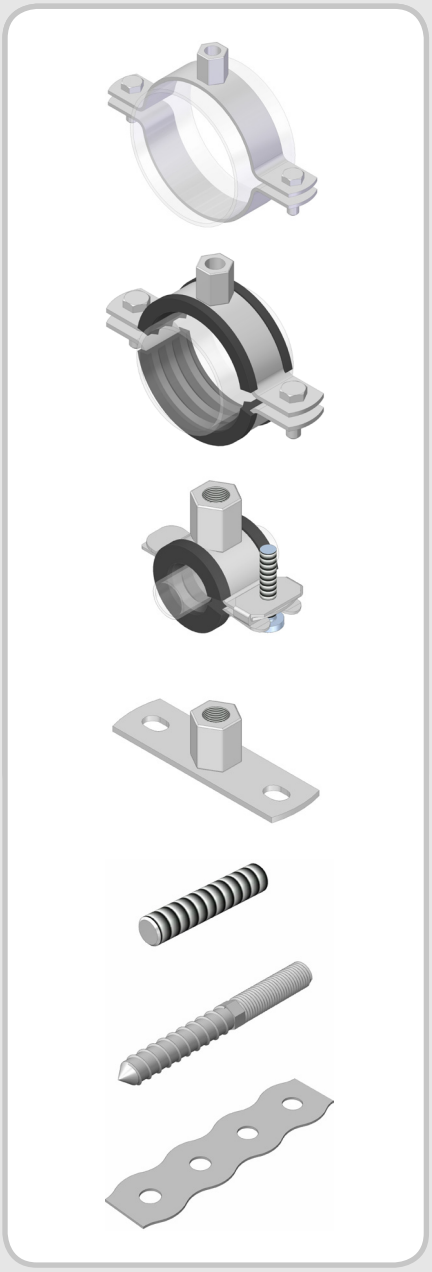

screw clamp
(type HSR without inlay)
(type HSR with inlay)

pipe clamp clip
(type HSC with inlay)

base plate
(type HSG)

grub screws

stair bolt

clamping band

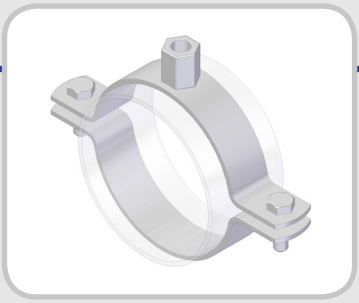

screw clamp
(type HSR without inlay)
(type HSR with inlay)

pipe clamp clip
(type HSC with inlay)

base plate
(type HSG)

grub screws

stair bolt

clamping band

For the order please provide the mandatory order data indicated in the technical drawings or the order number of the price sheets.

light pipe clamp, base plate and accessories for the mounting of pipes.

EPDM-inlay offers sound isolation.

material:

material	internal material specification	nut quality
1.4301 (A2)	05	A2
1.4571 (A4)	06	A4
1.4401 (AISI 316)	07	

EPDM-inlay:

colour: black
density: 1,32 g/cm³
hardness: 45 shore
noise insulation: 18 db (acc. to DIN 4102)
resistance against pull: 91 kg/cm²

breaking strain: 440%
resistance against external influences: excellent
operating temperature: -40 °C till +110 °C
fire resistance: class B2 (acc. to DIN 4102)
UV resistance: excellent

norms: see attachment 4.0 and 4.1

screw clamp type HSR without inlay

DN 10 - 100

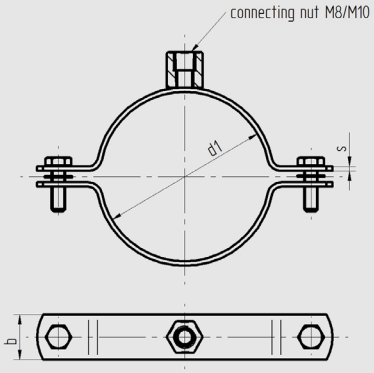

order example

type	material see 5.0.1	clamping range	extra
HSR	07	15-18	without inlay

inch	nominal diameter	clamping range d1	flat steel bxs	screws used	connecting nut	weight kg/pair	vertical Fz (kN)
3/8“	10	15-18	20x2	6x15	M8/M10	0,056	2,0
1/2“	15	20-24	20x2	6x15	M8/M10	0,062	2,0
3/4“	20	26-30	20x2	6x15	M8/M10	0,064	2,0
1“	25	32-36	20x2	6x15	M8/M10	0,070	2,0
1 1/4“	32	36-42	20x2	6x20	M8/M10	0,083	2,0
1 1/2“	40	47-50	20x2	6x20	M8/M10	0,089	2,0
-		51-55	20x2	6x20	M8/M10	0,094	2,0
2“	50	60-64	20x2	6x20	M8/M10	0,102	2,0
-		67-73	20x2	6x20	M8/M10	0,110	2,0
2 1/2“	65	75-80	20x2	6x20	M8/M10	0,117	2,0
-		81-86	20x2	6x20	M8/M10	0,117	2,0
3“	80	87-92	20x2	6x20	M8/M10	0,132	2,0
-		99-105	20x2	6x20	M8/M10	0,143	2,0
-		106-112	20x2	6x20	M8/M10	0,152	2,0
4“	100	114-119	20x2	6x26	M8/M10	0,161	2,0

screw clamp type HSR with inlay

DN 10 - 100

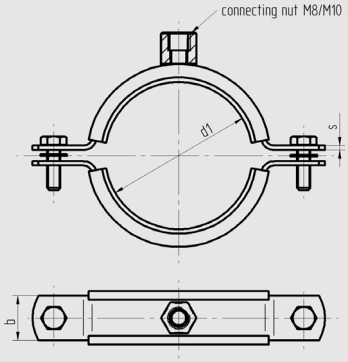

order example

type	material see 5.0.1	clamping range	extra
HSR	07	15-18	with inlay

inch	nominal diameter	clamping range d1	flat steel bxs	screws used	connecting nut	weight kg/pair	vertical Fz (kN)
3/8“	10	15-18	20x2	6x15	M8/M10	0,071	2,0
1/2“	15	20-24	20x2	6x15	M8/M10	0,077	2,0
3/4“	20	26-30	20x2	6x15	M8/M10	0,083	2,0
1“	25	32-36	20x2	6x15	M8/M10	0,091	2,0
1 1/4“	32	38-43	20x2	6x20	M8/M10	0,100	2,0
1 1/2“	40	47-50	20x2	6x20	M8/M10	0,110	2,0
-		53-58	20x2	6x20	M8/M10	0,120	2,0
2“	50	60-64	20x2	6x20	M8/M10	0,132	2,0
-		67-73	20x2	6x20	M8/M10	0,147	2,0
2 1/2“	65	75-80	20x2	6x20	M8/M10	0,154	2,0
-		81-86	20x2	6x20	M8/M10	0,154	2,0
3“	80	87-92	20x2	6x20	M8/M10	0,170	2,0
-		99-105	20x2	6x20	M8/M10	0,189	2,0
-		106-112	20x2	6x20	M8/M10	0,200	2,0
4“	100	114-119	20x2	6x26	M8/M10	0,210	2,0

pipe clamp clip type HSC with inlay

DN 8 - 500

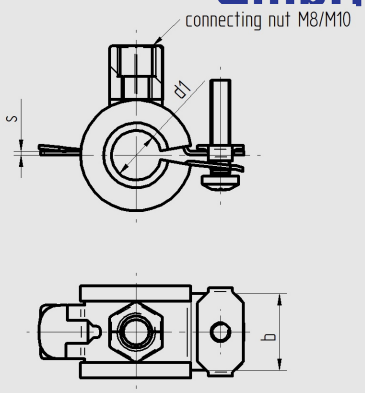

order example

type	material see 5.0.1	clamping range	extra
HSC	07	14-15	with inlay

inch	nominal diameter	clamping range d1	flat steel bxs	screws used	connecting nut	weight kg/pair	vertical Fz (kN)
1/4“	8	14-15	20x1	5x15	M8/M10	0,044	2,0
3/8“	10	16-19	20x1	5x15	M8/M10	0,047	2,0
1/2“	15	21-23	20x1	5x15	M8/M10	0,052	2,0
3/4“	20	26-28	20x1	5x15	M8/M10	0,058	2,0
1“	25	32-35	20x1	5x20	M8/M10	0,065	2,0
1 1/4“	32	40-43	20x1	5x20	M8/M10	0,079	2,0
1 1/2“	40	48-51	20x1	5x20	M8/M10	0,081	2,0
-		52-56	20x1	5x20	M8/M10	0,088	2,0
2“	50	57-60	20x1	5x20	M8/M10	0,098	2,0

base plate type HSG

with welded connecting nut M8/M10

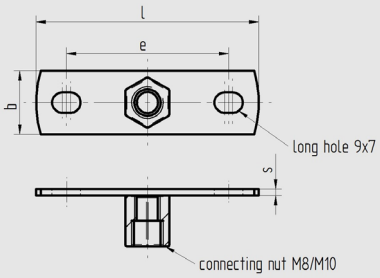

order example

type	material see 5.0.1	connecting nut
HSG	07	M8/M10

flat steel bxs	e	l	connecting nut	weight kg/pc.
20x2	53	70	M8/M10	0,028

grub screw

DIN 976, form A
metrical right-hand thread

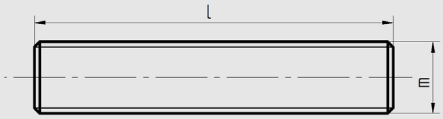

order example

type	material see 5.0.1	screwing
grub screw	A4	M8x30

M	l	weight kg/pc.
8	30	0,009
8	40	0,012
8	50	0,015
10	30	0,013
10	40	0,017
10	50	0,021

stair screw

metrical right-hand therad

order example

type	material see 5.0.1	screwing
stair screw	A4	M8x50

M	l	weight kg/pc.
8	50	0,011
8	90	0,020
10	60	0,050
10	90	0,051

clamping band

1 piece = 10 meters in synthetic tape
or similar

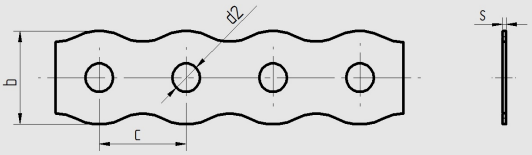

order example

type	material see 5.0.1	bxs
clamping band	07	12x0,8

flat steel bxs	d2	c	weight kg/pc.
12x0,8	5	14	0,60
17x0,8	7	20	0,80
26x1,0	8	25	1,50

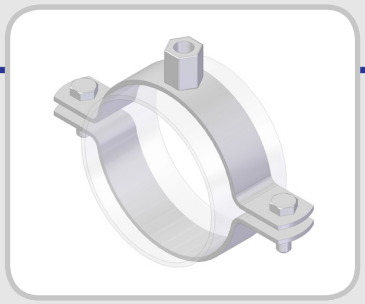

screw clamp type HSR without inlay DN 10 - 100

1.4401

product group discount: 7000

item number	designation	price Euro	price per
7000	HSR 07 15-18 mm without inlay	351,00	100
7001	HSR 07 20-24 mm without inlay	370,00	100
7002	HSR 07 26-30 mm without inlay	390,00	100
7003	HSR 07 32-36 mm without inlay	410,00	100
7004	HSR 07 36-42 mm without inlay	442,00	100
7005	HSR 07 47-50 mm without inlay	472,00	100
7006	HSR 07 51-55 mm without inlay	491,00	100
7007	HSR 07 60-64 mm without inlay	522,00	100
7008	HSR 07 67-73 mm without inlay	571,00	100
7009	HSR 07 75-80 mm without inlay	583,00	100
7190	HSR 07 81-86 mm without inlay	583,00	100
7010	HSR 07 87-92 mm without inlay	641,00	100
7011	HSR 07 99-105 mm without inlay	697,00	100
7012	HSR 07 106-112 mm without inlay	737,00	100
7013	HSR 07 114-119 mm without inlay	801,00	100

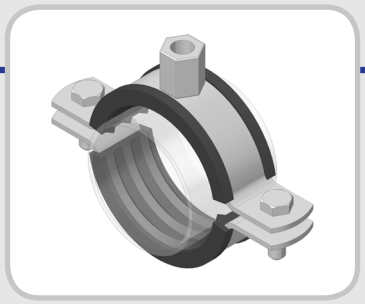

screw clamp type HSR with inlay DN 10 - 100

1.4401

product group discount: 7001

item number	designation	price Euro	price per
7020	HSR 07 15-18 mm with EPDM-inlay	405,00	100
7021	HSR 07 20-24 mm with EPDM-inlay	427,00	100
7022	HSR 07 26-30 mm with EPDM-inlay	443,00	100
7023	HSR 07 32-36 mm with EPDM-inlay	477,00	100
7024	HSR 07 38-43 mm with EPDM-inlay	512,00	100
7025	HSR 07 47-50 mm with EPDM-inlay	552,00	100
7026	HSR 07 53-58 mm with EPDM-inlay	578,00	100
7027	HSR 07 60-64 mm with EPDM-inlay	635,00	100
7028	HSR 07 67-73 mm with EPDM-inlay	665,00	100
7029	HSR 07 75-80 mm with EPDM-inlay	688,00	100
7191	HSR 07 81-86 mm with EPDM-inlay	688,00	100
7030	HSR 07 87-92 mm with EPDM-inlay	759,00	100
7031	HSR 07 99-105 mm with EPDM-inlay	846,00	100
7032	HSR 07 106-112 mm with EPDM-inlay	895,00	100
7033	HSR 07 114-119 mm with EPDM-inlay	923,00	100

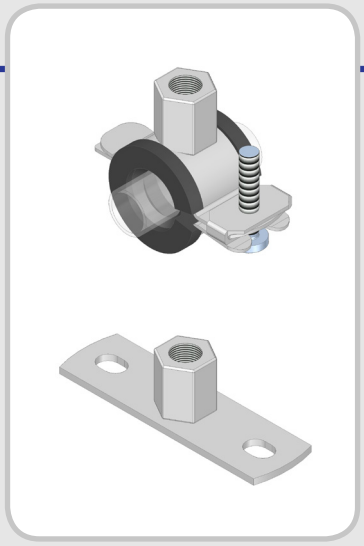

pipe clamp clip type HSC with inlay DN 8 - 50
1.4401
product group discount: 7002

base plate type HSG with welded connecting nut M8/M10
1.4401
product group discount: 7003

item number	designation	price Euro	price per
7040	HSC 07 14-15 mm with EPDM-inlay	289,00	100
7041	HSC 07 16-19 mm with EPDM-inlay	300,00	100
7042	HSC 07 21-23 mm with EPDM-inlay	312,00	100
7043	HSC 07 26-28 mm with EPDM-inlay	337,00	100
7044	HSC 07 32-35 mm with EPDM-inlay	361,00	100
7045	HSC 07 40-43 mm with EPDM-inlay	385,00	100
7046	HSC 07 48-51 mm with EPDM-inlay	414,00	100
7047	HSC 07 52-56 mm with EPDM-inlay	432,00	100
7048	HSC 07 57-60 mm with EPDM-inlay	463,00	100

item number	designation	price Euro	price per
7055	HSG 07 M8/M10	239,00	100

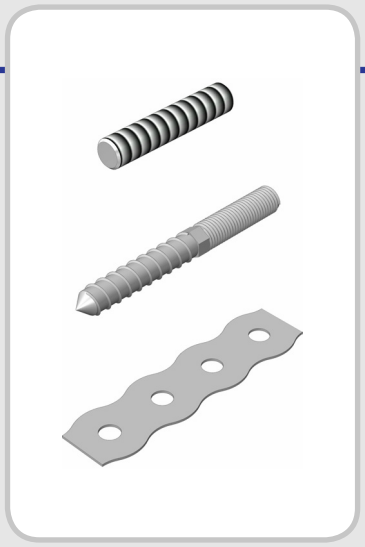

grub screws

1.4571 All prices without alloy surcharge.

product group discount: 7003

stair screw

1.4301 All prices without alloy surcharge.

1.4571 All prices without alloy surcharge.

product group discount: 7003

clamping band

1.4401

product group discount: 7003

item number	designation	price Euro	price per
7060	grub screw M8x30, A4	93,00	100
7061	grub screw M8x40, A4	95,00	100
7062	grub screw M8x50, A4	120,00	100
7063	grub screw M10x30, A4	122,00	100
7064	grub screw M10x40, A4	129,00	100
7065	grub screw M10x50, A4	168,00	100

item number	designation	price Euro	price per
7150	stair bolt M8x50, A2	37,00	100
7151	stair bolt M8x90, A2	65,00	100
7180	stair bolt M10x60, A2	90,00	100
7181	stair bolt M10x90, A2	149,00	100

item number	designation	price Euro	price per
7080	stair bolt M8x50, A4	40,00	100
7081	stair bolt M8x90, A4	84,00	100
7090	stair bolt M10x60, A4	168,00	100
7091	stair bolt M10x90, A4	189,00	100

item number	designation	price Euro	price per
7110	LB 07 12x0,8 mm	3.051,00	100
7111	LB 07 17x0,8 mm	4.078,00	100
7112	LB 07 26x1,0 mm	8.034,00	100

ROHRBEFESTIGUNGEN
Hammerschmid
GmbH

malleable iron pipe fittings

malleable iron pipe fittings TGV

The optimal construction solution for pipes that are not medium filled. Without too much effort you can quickly and easily set up railings, staircases, safety barriers, shelving, signboards, storage spaces, stands, children‘s play areas etc. Within our product range you will also find fittings such as pipes, socket wrenches and replacement worm screws that accompany the different pipe connectors.

An individual screwing point can withstand a pulling force of 40 Nm of torque with an extraction force of 9000 N. Not to be used as suspended construction when tensile forces are applied.

This almost universally applicable construction kit offers above and beyond the usual welding work an enormous time and saving potential.

material:

material	nut quality
malleable iron	410S

used pipes:

- 26,9 x 2,65
- 33,7 x 3,25
- 42,4 x 6,25
- 48,3 x 3,25
- 60,3 x 3,65

accessories - scope of delivery:
Malleable iron pipe fittings are supplied with pre-assembled worm screws.

extra surface protection:
These articles can only be delivered in hot dip galvanized.

norms: see attachment 4.0 and 4.1

malleable iron pipe fittings

order example

type	group	pipe diameter d1
TGV	02	26,9

TGV 02 - short T-joint 90°

hot dip galvanized

d1	inch	A	B	weight kg/pc.
26,9	3/4“	44	36	0,24
33,7	1“	48	44	0,37
42,4	1 1/4“	60	54	0,50
48,3	1 1/2“	68	64	0,74
60,3	2“	85	75	0,98

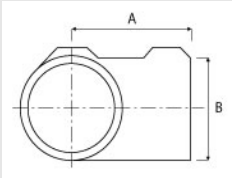

Pipe connector for creating a 90° branch connection. Pipe must be continuous, clamping two pipes is not possible. To do this please use TGV 04.

TGV 03 - variable T-joint 30°-60°

hot dip galvanized

d1	inch	A	B	weight kg/pc.
33,7	1“	54	73	0,53
42,4	1 1/4“	63	89	0,90
48,3	1 1/2“	68	102	0,91

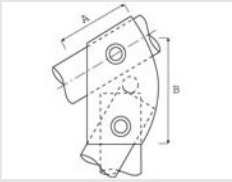

With this pipe connector you can have your connection at an angle between 30° and 60°.

TGV 04 - long T-joint 90°

hot dip galvanized

d1	inch	A	B	weight kg/pc.
26,9	3/4“	88	44	0,36
33,7	1“	96	48	0,50
42,4	1 1/4“	120	60	0,89
48,3	1 1/2“	136	68	1,21
60,3	2“	170	85	2,27

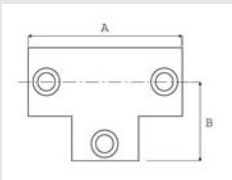

Pipe connector for creating a connection with an angle of 90°. With this connector it is possible to clamp two pipes together.

malleable iron pipe fittings

order example

type	group	pipe diameter d1
TGV	06	26,9

TGV 06 - 90° elbow

hot dip galvanized

d1	inch	A	weight kg/pc.
26,9	3/4“	44	0,26
33,7	1“	48	0,48
42,4	1 1/4“	60	0,68
48,3	1 1/2“	68	0,99
60,3	2“	86	1,71

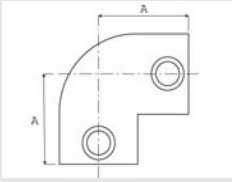

90° corner pipe connector

TGV 07 - variable T-joint 105°-165°

hot dip galvanized

d1	inch	A	weight kg/pc.
33,7	1“	90	0,40
42,4	1 1/4“	106	0,67
48,3	1 1/2“	120	0,85

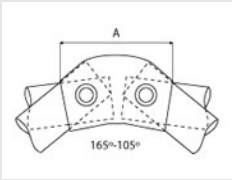

Corner pipe connector for a required angle between 105° and 165°.

TGV 08 - coupler

hot dip galvanized

d1	inch	A	weight kg/pc.
26,9	3/4“	64	0,22
33,7	1“	90	0,44
42,4	1 1/4“	96	0,56
48,3	1 1/2“	96	0,60
60,3	2“	125	1,37

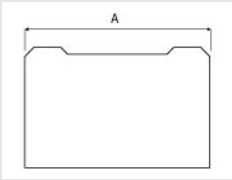

Connection clamp for pipes of the same diameter. Not suitable for setup where a high vertical pressure would be applied.

malleable iron pipe fittings

order example

type	group	pipe diameter d1
TGV	09	33,7

TGV 09 - coupler internal

hot dip galvanized

d1	inch	A	B	weight kg/pc.
33,7	1“	78	20	0,28
42,4	1 1/4“	78	20	0,42
48,3	1 1/2“	80	22	0,53

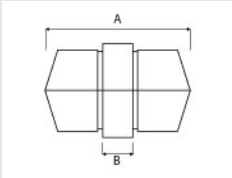

Internal pipe connector for lengthening the pipe on each axis using form fitting. This pipe connector is not built to withstand direct pressure. The wall thickness must be 3.2 mm.

TGV 10 - low flange plate

hot dip galvanized

d1	inch	A	B	C	D	E	weight kg/pc.
26,9	3/4“	63	48	81	7	4	0,37
33,7	1“	65	48	84	7	4	0,51
42,4	1 1/4“	75	51	98	9	6	0,62
48,3	1 1/2“	85	54	112	11	6	0,72
60,3	2“	96	60	130	11	6	1,20

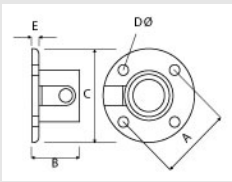

This clip is inserted during construction - during which a position fixing is required. Not suitable for use as a base flange to brace a safety railing or a similar system.

TGV 12 - high flange plate

hot dip galvanized

d1	inch	A	B	C	D	E	F	weight kg/pc.
26,9	3/4“	112	76	64	76	11	8	0,53
33,7	1“	128	88	80	88	14	10	0,96
42,4	1 1/4“	144	102	80	88	14	10	1,21
48,3	1 1/2“	156	117	92	88	14	10	1,34
60,3	2“	165	120	98	130	14	18	2,12

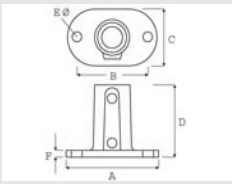

Sturdy base plate for supporting vertical pipes. Vertical ridges with two clamping screws increase the stability of the clamp.

malleable iron pipe fittings

order example

type	group	pipe diameter d1
TGV	14	33,7

TGV 14 - rectangular vertical mount

hot dip galvanized

d1	inch	A	B	C	D	E	F	weight kg/pc.
33,7	1“	104	64	66	44	98	14	1,01
42,4	1 1/4“	114	64	79	50	112	14	1,19
48,3	1 1/2“	120	64	90	60	124	14	1,47

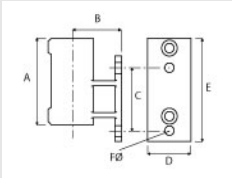

Base plate for supporting vertical pipes. This connector does not have a through hole.

TGV 15 - triangular vertical mount

hot dip galvanized

d1	inch	A	B	C	D	E	F	weight kg/pc.
33,7	1“	63	25	71	11	24	6	0,69
42,4	1 1/4“	72	23	82	11	28	6	0,96
48,3	1 1/2“	78	23	86	11	31	6	1,11

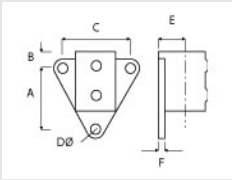

Side assembly with a triangular base plate for vertical pipes. Ideal for railings. This connector does not have a through hole.

TGV 16 - rectangular mount plate 90° vertical

hot dip galvanized

d1	inch	A	B	C	D	E	F	weight kg/pc.
33,7	1“	114	64	24	66	98	14	0,87
42,4	1 1/4“	114	64	27	72	104	14	1,43
48,3	1 1/2“	120	64	30	81	114	14	1,56

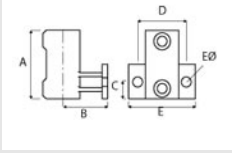

Side mounting clamp with a rectangular base plate for vertical pipes. Not suitable for heavy pressure. This connector does not have a through hole.

malleable iron pipe fittings

order example

type	group	pipe diameter d1
TGV	17	33,7

TGV 17 - base mount for setting in concrete

hot dip galvanized

d1	inch	A	B	weight kg/pc.
33,7	1“	126	125	1,60
42,4	1 1/4“	140	135	2,25
48,3	1 1/2“	140	138	2,45

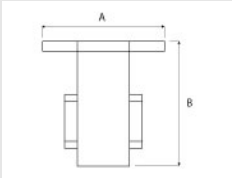

Base for mounting in concrete. With a secure clamping screw any pipes clamped in this base are securely hold in place.

TGV 18 - closed 90° corner connector

hot dip galvanized

d1	inch	A	weight kg/pc.
26,9	3/4“	44	0,52
33,7	1“	48	0,54
42,4	1 1/4“	60	0,93
48,3	1 1/2“	68	1,25

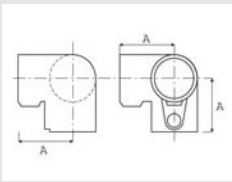

90° 3-way-corner pipe connector for upper corner connections and other rectangular systems.

TGV 20 - corner connector 90°

hot dip galvanized

d1	inch	A	weight kg/pc.
26,9	3/4“	44	0,30
33,7	1“	48	0,46
42,4	1 1/4“	60	0,66
48,3	1 1/2“	68	0,99
60,3	2“	85	1,38

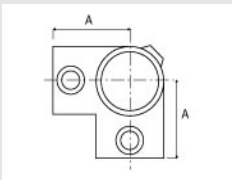

Often used alongside TGV 18. Suitable for corner connections that require a through hole.

malleable iron pipe fittings

order example

type	group	pipe diameter d1
TGV	21	33,7

TGV 21 - angle joint 90°-180°

hot dip galvanized

d1	inch	A	weight kg/pc.
33,7	1“	58	0,28
42,4	1 1/4“	73	0,59
48,3	1 1/2“	81	0,74

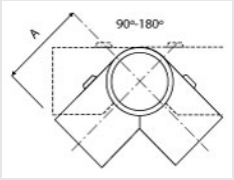

For setting up pipes in different directions that are at the same height. Suitable for connections between 90° and 180°. Requires a central vertical pipe.

TGV 22 - cross connector 90°

hot dip galvanized

d1	inch	A	weight kg/pc.
26,9	3/4“	88	0,34
33,7	1“	96	0,44
42,4	1 1/4“	120	0,61
48,3	1 1/2“	136	1,06
60,3	2“	175	1,43

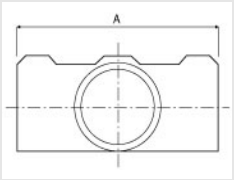

Pipe has to go straight through the connector. Clamping a second pipe is not possible.

TGV 23 - cross connector variable 30°-45°

hot dip galvanized

d1	inch	A	weight kg/pc.
33,7	1“	146	0,65
42,4	1 1/4“	178	1,00
48,3	1 1/2“	216	1,40

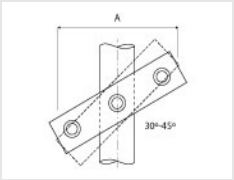

Combinable with TGV 03 to create a parallel running pipe.

malleable iron pipe fittings

order example

type	group	pipe diameter d1
TGV	24	26,9

TGV 24 - 3 way T-joint

hot dip galvanized

d1	inch	A	B	weight kg/pc.
26,9	3/4“	88	44	0,40
33,7	1“	96	48	0,71
42,4	1 1/4“	120	60	0,72
48,3	1 1/2“	136	68	1,09
60,3	2“	176	88	2,20

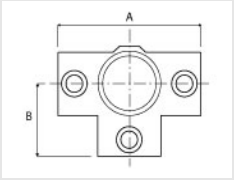

3-way pipe connector with 90° angle connections. Vertical support pipe hole goes all the way through the connector.

TGV 26 - 4 way T-joint

hot dip galvanized

d1	inch	A	B	C	weight kg/pc.
26,9	3/4“	32	82	82	0,77
33,7	1“	43	96	96	0,77
42,4	1 1/4“	48	120	120	1,28
48,3	1 1/2“	50	136	136	1,65
60,3	2“	54	175	175	2,00

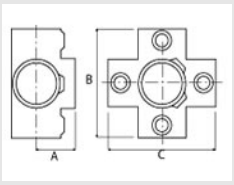

4-way pipe connector with 90° angle connections. Vertical support pipe hole goes all the way through the connector.

TGV 28 - 90° cross connector

hot dip galvanized

d1	inch	A	B	weight kg/pc.
26,9	3/4“	36	32	0,24
33,7	1“	42	40	0,36
42,4	1 1/4“	54	49	0,68
48,3	1 1/2“	60	54	0,83
60,3	2“	62	68	1,23

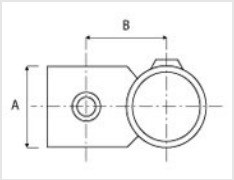

It is possible to have two through pipes, one vertical and one horizontal.

malleable iron pipe fittings

order example

type	group	pipe diameter d1
TGV	30	26,9

TGV 30 - 90° cross connector with feeder

hot dip galvanized

d1	inch	A	B	C	weight kg/pc.
26,9	3/4“	31	35	41	0,28
33,7	1“	42	40	48	0,44
42,4	1 1/4“	54	49	60	0,70
48,3	1 1/2“	60	54	68	0,99
60,3	2“	62	68	86	1,60

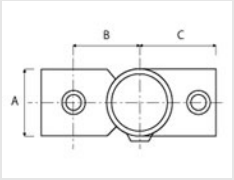

Allows a further pipe to pass through a horizontal and a vertical pipe connection.

TGV 31 - short T-joint 90° pluggable

hot dip galvanized

d1	inch	A	B	C	weight kg/pc.
33,7	1“	56	33	33	0,30
42,4	1 1/4“	62	42	36	0,50
48,3	1 1/2“	72	48	41	0,68

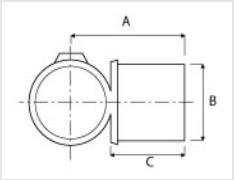

The pluggable pipe connector allows for the mounting of a pipe.

TGV 32 - T-joint 90° open

hot dip galvanized

d1	inch	A	weight kg/pc.
26,9	3/4“	50	0,29
33,7	1“	54	0,36
42,4	1 1/4“	64	0,56
48,3	1 1/2“	74	0,53

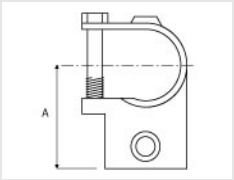

Suitable for expanding or making changes to existing structures.

malleable iron pipe fittings

order example

type	group	pipe diameter d1
TGV	34	26,9

TGV 34 - centre console

hot dip galvanized

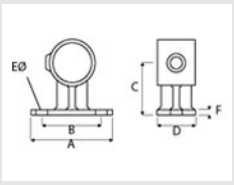

d1	inch	A	B	C	D	E	F	weight kg/pc.
26,9	3/4“	76	57	55	45	8	5	0,35
33,7	1“	92	65	58	48	10	10	0,44
42,4	1 1/4“	112	84	60	48	10	10	0,49
48,3	1 1/2“	112	80	68	54	10	10	0,88

Suitable for directly connecting hand rails and constructions to walls and other structures.

TGV 36 - single joint

hot dip galvanized

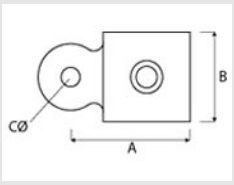

d1	inch	A	B	C	weight kg/pc.
26,9	3/4“	56	39	10	0,22
33,7	1“	66	39	10	0,28
42,4	1 1/4“	75	45	10	0,37
48,3	1 1/2“	75	45	10	0,39
60,3	2“	100	50	10	0,60

Sometimes used in connection with TGV 42. Similarly for mounting on plates and boards etc.

TGV 38 - double joint

hot dip galvanized

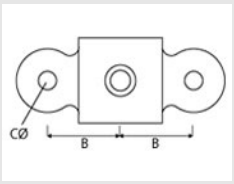

d1	inch	A	B	C	weight kg/pc.
33,7	1“	123	43	10	0,36
42,4	1 1/4“	134	47	10	0,48
48,3	1 1/2“	142	51	10	0,47
60,3	2“	160	56	10	0,66

Similar to TGV 36, with eyes on the same axis.

malleable iron pipe fittings

order example

type	group	pipe diameter d1
TGV	40	26,9

TGV 40 - double joint 90°

hot dip galvanized

d1	inch	A	B	weight kg/pc.
26,9	3/4“	38	10	0,30
33,7	1“	46	10	0,39
42,4	1 1/4“	48	10	0,47
48,3	1 1/2“	54	10	0,52

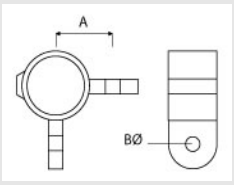

Similar to TGV 36, with eyes at a 90° angle.

TGV 42 - head joint

hot dip galvanized

d1	inch	A	B	C	D	weight kg/pc.
26,9	3/4“	61	25	10	12	0,25
33,7	1“	61	25	10	12	0,36
42,4	1 1/4“	70	25	10	12	0,45
48,3	1 1/2“	77	25	10	12	0,57
60,3	2“	94	36	10	12	0,96

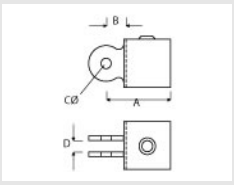

Mainly used in combination with TGV 36 and TGV 38. No through hole.

TGV 44 - single linking joint

hot dip galvanized

d1	inch	A	B	C	weight kg/pc.
26,9	3/4“	34	25	56	0,51
33,7	1“	36	25	66	0,68
42,4	1 1/4“	45	25	75	0,87
48,3	1 1/2“	53	25	75	1,00
60,3	2“	58	36	100	1,60

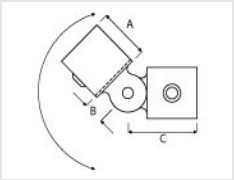

Pipe connector joint for adjustable angle mounting.

malleable iron pipe fittings

order example

type	group	pipe diameter d1
TGV	46	26,9

TGV 46 - double linking joint

hot dip galvanized

d1	inch	A	B	C	weight kg/pc.
26,9	3/4“	38	25	36	0,22
33,7	1“	43	25	36	1,17
42,4	1 1/4“	47	25	45	1,47
48,3	1 1/2“	51	25	53	1,69

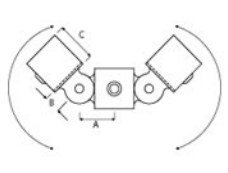

Double pipe connector joint for adjustable angle mounting.

TGV 48 - double linking joint 90°

hot dip galvanized

d1	inch	A	B	C	weight kg/pc.
33,7	1“	25	61	107	1,19
42,4	1 1/4“	25	70	118	1,46
48,3	1 1/2“	25	78	132	1,75

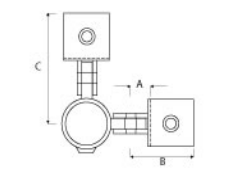

Double pipe connector joint for adjustable angle mounting for corner pipes.

TGV 50 - flange plate for joint coupling

hot dip galvanized

d1	inch	A	B	C	D	E	F	weight kg/pc.
26,9	3/4“	40	84	116	54	12	48	0,33
33,7	1“	40	84	116	54	12	48	0,33
42,4	1 1/4“	40	84	116	54	12	48	0,33
48,3	1 1/2“	40	84	116	54	12	48	0,33
60,3	2“	40	84	116	54	12	48	0,33

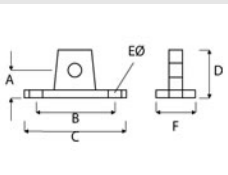

Combinable with TGV 42. Base plate for mounting on floors and walls.

malleable iron pipe fittings

order example

type	group	pipe diameter d1
TGV	52	26,9

TGV 52 - flange plate with joint

hot dip galvanized

d1	inch	A	B	C	D	weight kg/pc.
26,9	3/4“	40	34	25	10	0,62
33,7	1“	40	36	25	10	0,73
42,4	1 1/4“	40	45	25	10	0,82
48,3	1 1/2“	40	53	25	10	0,94
60,3	2“	40	58	36	10	1,33

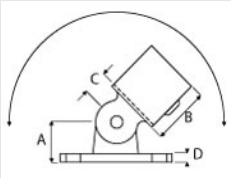

Set consisting of TGV 42 and TGV 50. Suitable for mounting on floors and walls.

TGV 58 - support ring for pipe connector

hot dip galvanized

d1	inch	A	weight kg/pc.
33,7	1“	25	0,17
42,4	1 1/4“	25	0,19
48,3	1 1/2“	25	0,23

Mounts flush under another pipe connector and allows the connection to withstand a higher pressure before failing.

TGV 60 - hinge mount

hot dip galvanized

d1	inch	A	B	C	weight kg/pc.
26,9	3/4“	30	12	25	0,17
33,7	1“	33	12	27	0,26
42,4	1 1/4“	37	13	27	0,32
48,3	1 1/2“	40	13	27	0,35

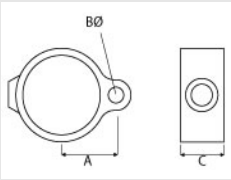

Internal hinge pipe connector. Combined with TGV 62 it can be used for hanging doors etc.

malleable iron pipe fittings

order example

type	group	pipe diameter d1
TGV	62	26,9

TGV 62 - hinge bolt

hot dip galvanized

d1	inch	A	B	C	D	weight kg/pc.
26,9	3/4“	25	34	11	30	0,25
33,7	1“	27	34	11	33	0,33
42,4	1 1/4“	27	38	12	37	0,38
48,3	1 1/2“	27	38	12	40	0,41

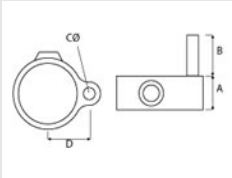

External hinge pipe connector. When combined with TGV 61 it can be used for hanging doors, for example.

TGV 64 - hook

hot dip galvanized

d1	inch	A	B	C	weight kg/pc.
33,7	1“	25	34	24	0,24
42,4	1 1/4“	25	39	24	0,28
48,3	1 1/2“	25	41	24	0,31

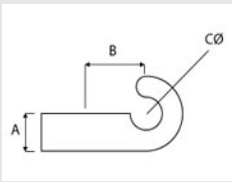

Pipe connector for mounting chains.

TGV 66 - connector open

hot dip galvanized

d1	inch	A	B	C	D	weight kg/pc.
26,9	3/4“	35	27	27	27	0,12
33,7	1“	42	34	34	34	0,19
42,4	1 1/4“	50	42	42	42	0,25
48,3	1 1/2“	56	48	48	48	0,32

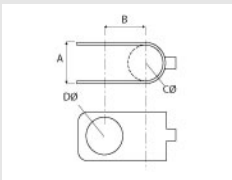

90° crossing pipe connector for adding to an existing construction.

malleable iron pipe fittings

order example

type	group	pipe diameter d1
TGV	70	26,9

TGV 70 - single sided clamp connection

hot dip galvanized

d1	inch	A	B	weight kg/pc.
26,9	3/4“	68	58	0,07
33,7	1“	71	61	0,08
42,4	1 1/4“	75	65	0,09
48,3	1 1/2“	78	68	0,09

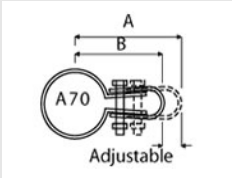

Single sided loop clip. E.g. for mounting chain-link fences or something similar.

TGV 72 - double sided clamp connection

hot dip galvanized

d1	inch	A	B	weight kg/pc.
33,7	1“	71	61	0,13
42,4	1 1/4“	75	65	0,13
48,3	1 1/2“	78	68	0,13

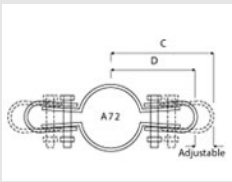

Double sided loop clip. E.g. for mounting chain-link fences or something similar.

TGV G02 - T-connector short, adjustable 4°-10°

hot dip galvanized

d1	inch	A	B	weight kg/pc.
48,3	1 1/2“	68	64	0,75

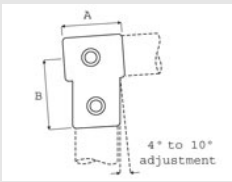

T-pipe connector for angle application. The horizontal pipe must go through the connector. Two pipes cannot be clamped, for this use TGV G04.

malleable iron pipe fittings

order example

type	group	pipe diameter d1
TGV	G04	48,3

TGV G04 - T-connector long, adjustable 4°-10°

hot dip galvanized

d1	inch	A	B	weight kg/pc.
48,3	1 1/2“	144	76	1,33

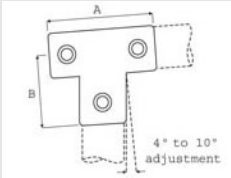

T-pipe connector for angle application. The horizontal pipe can be two different parts as double clamping is possible with this unit.

TGV G06 - knee, adjustable 4°-10°

hot dip galvanized

d1	inch	A	weight kg/pc.
48,3	1 1/2“	68	0,95

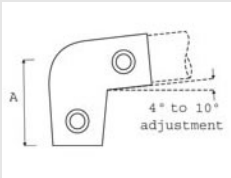

Similar to TGV G06. Pipes that are not at 90° can be connected using this unit.

TGV G12 - foot plate, adjustable 4°-10°

hot dip galvanized

d1	inch	A	B	C	D	E	F	weight kg/pc.
48,3	1 1/2“	152	112	92	88	14	10	1,48

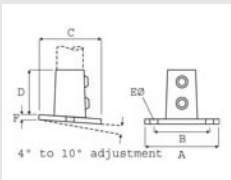

Suitable for sloped surfaces when a level construction is required.

malleable iron pipe fittings

order example

type	group	pipe diameter d1
TGV	G22	48,3

TGV G22 - cross connector, adjustable 4°-10°

hot dip galvanized

d1	inch	A	weight kg/pc.
48,3	1 1/2“	144	0,98

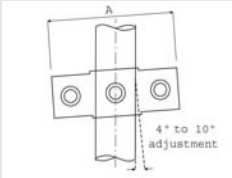

Similar to TGV 23, however with less mobility. When used with TGV G02 and G04 it is possible to create a parallel pipe layout.

threaded pipe DIN 2444

hot dip galvanized

d1	inch	weight kg/m
26,9	3/4“	1,65
33,7	1“	2,55
42,4	1 1/4“	3,28
48,3	1 1/2“	3,77
60,3	2“	5,33

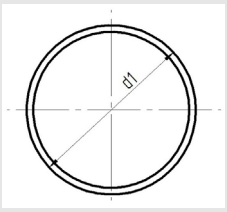

threaded pipe DIN 2444

plastic end cap

for welded, galvanized threaded pipes

d1	inch	weight kg/pc.
26,9	3/4“	0,003
33,7	1“	0,005
42,4	1 1/4“	0,007
48,3	1 1/2“	0,009
60,3	2“	0,011

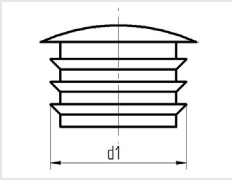

plastic end cap

malleable iron pipe fittings

product group discount: 9024

TGV 02 - short T-joint 90°

hot dip galvanized

item number	designation	price Euro	price per
71000	TGV 02 26,9	403,00	100
71001	TGV 02 33,7	473,00	100
71002	TGV 02 42,4	652,00	100
71003	TGV 02 48,3	815,00	100
71004	TGV 02 60,3	1.388,00	100

TGV 03 - variable T-joint 30°-60°

hot dip galvanized

item number	designation	price Euro	price per
71005	TGV 03 33,7	678,00	100
71006	TGV 03 42,4	896,00	100
71007	TGV 03 48,3	1.158,00	100

TGV 04 - long T-joint 90°

hot dip galvanized

item number	designation	price Euro	price per
71008	TGV 04 26,9	755,00	100
71009	TGV 04 33,7	729,00	100
71010	TGV 04 42,4	1.100,00	100
71011	TGV 04 48,3	1.427,00	100
71012	TGV 04 60,3	2.643,00	100

malleable iron pipe fittings

product group discount: 9024

TGV 06 - 90° elbow

hot dip galvanized

item number	designation	price Euro	price per
71013	TGV 06 26,9	524,00	100
71014	TGV 06 33,7	563,00	100
71015	TGV 06 42,4	806,00	100
71016	TGV 06 48,3	840,00	100
71017	TGV 06 60,3	1.792,00	100

TGV 07 - variable T-joint 105°-165°

hot dip galvanized

item number	designation	price Euro	price per
71018	TGV 07 33,7	2.205,00	100
71019	TGV 07 42,4	2.770,00	100
71020	TGV 07 48,3	2.805,00	100

TGV 08 - coupler

hot dip galvanized

item number	designation	price Euro	price per
71021	TGV 08 26,9	505,00	100
71022	TGV 08 33,7	531,00	100
71023	TGV 08 42,4	716,00	100
71024	TGV 08 48,3	740,00	100
71025	TGV 08 60,3	3.860,00	100

malleable iron pipe fittings

product group discount: 9024

TGV 09 - coupler internal

hot dip galvanized

item number	designation	price Euro	price per
71026	TGV 09 33,7	531,00	100
71027	TGV 09 42,4	684,00	100
71028	TGV 09 48,3	806,00	100

TGV 10 - low flange plate

hot dip galvanized

item number	designation	price Euro	price per
71029	TGV 10 26,9	499,00	100
71030	TGV 10 33,7	582,00	100
71031	TGV 10 42,4	710,00	100
71032	TGV 10 48,3	960,00	100
71033	TGV 10 60,3	1.696,00	100

TGV 12 - high flange plate

hot dip galvanized

item number	designation	price Euro	price per
71034	TGV 12 26,9	806,00	100
71035	TGV 12 33,7	889,00	100
71036	TGV 12 42,4	1.248,00	100
71037	TGV 12 48,3	1.606,00	100
71038	TGV 12 60,3	2.144,00	100

malleable iron pipe fittings

product group discount: 9024

TGV 14 - rectangular vertical mount

hot dip galvanized

item number	designation	price Euro	price per
71039	TGV 14 33,7	1.254,00	100
71040	TGV 14 42,4	1.657,00	100
71041	TGV 14 48,3	1.996,00	100

TGV 15 - triangular vertical mount

hot dip galvanized

item number	designation	price Euro	price per
71042	TGV 15 33,7	960,00	100
71043	TGV 15 42,4	1.203,00	100
71044	TGV 15 48,3	1.363,00	100

TGV 16 - rectangular mount plate 90° vertical

hot dip galvanized

item number	designation	price Euro	price per
71045	TGV 16 33,7	1.280,00	100
71046	TGV 16 42,4	1.702,00	100
71047	TGV 16 48,3	2.054,00	100

malleable iron pipe fittings

product group discount: 9024

TGV 17 - base mount for setting in concrete

hot dip galvanized

item number	designation	price Euro	price per
71048	TGV 17 33,7	2.412,00	100
71049	TGV 17 42,4	2.624,00	100
71050	TGV 17 48,3	2.675,00	100

TGV 18 - closed 90° corner connector

hot dip galvanized

item number	designation	price Euro	price per
71051	TGV 18 26,9	736,00	100
71052	TGV 18 33,7	787,00	100
71053	TGV 18 42,4	1.120,00	100
71054	TGV 18 48,3	1.260,00	100

TGV 20 - corner connector 90°

hot dip galvanized

item number	designation	price Euro	price per
71055	TGV 20 26,9	595,00	100
71056	TGV 20 33,7	640,00	100
71057	TGV 20 42,4	876,00	100
71058	TGV 20 48,3	980,00	100
71059	TGV 20 60,3	1.789,00	100

malleable iron pipe fittings

product group discount: 9024

TGV 21 - angle joint 90°-180°

hot dip galvanized

item number	designation	price Euro	price per
71060	TGV 21 33,7	627,00	100
71061	TGV 21 42,4	825,00	100
71062	TGV 21 48,3	857,00	100

TGV 22 - cross connector 90°

hot dip galvanized

item number	designation	price Euro	price per
71063	TGV 22 26,9	576,00	100
71064	TGV 22 33,7	684,00	100
71065	TGV 22 42,4	844,00	100
71066	TGV 22 48,3	990,00	100
71067	TGV 22 60,3	1.913,00	100

TGV 23 - cross connector variable 30°-45°

hot dip galvanized

item number	designation	price Euro	price per
71068	TGV 23 33,7	1.630,00	100
71069	TGV 23 42,4	1.996,00	100
71070	TGV 23 48,3	2.291,00	100

malleable iron pipe fittings

product group discount: 9024

TGV 24 - 3 way T-joint

hot dip galvanized

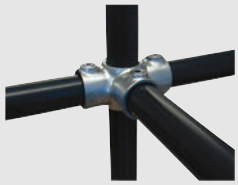

item number	designation	price Euro	price per
71071	TGV 24 26,9	774,00	100
71072	TGV 24 33,7	870,00	100
71073	TGV 24 42,4	1.292,00	100
71074	TGV 24 48,3	1.606,00	100
71075	TGV 24 60,3	2.361,00	100

TGV 26 - 4 way T-joint

hot dip galvanized

item number	designation	price Euro	price per
71076	TGV 26 26,9	1.075,00	100
71077	TGV 26 33,7	1.248,00	100
71078	TGV 26 42,4	1.913,00	100
71079	TGV 26 48,3	1.926,00	100
71080	TGV 26 60,3	8.900,00	100

TGV 28 - 90° cross connector

hot dip galvanized

item number	designation	price Euro	price per
71081	TGV 28 26,9	480,00	100
71082	TGV 28 33,7	467,00	100
71083	TGV 28 42,4	672,00	100
71084	TGV 28 48,3	800,00	100
71085	TGV 28 60,3	1.414,00	100

malleable iron pipe fittings

product group discount: 9024

TGV 30 - 90° cross connector with feeder

hot dip galvanized

item number	designation	price Euro	price per
71086	TGV 30 26,9	2.677,00	100
71087	TGV 30 33,7	761,00	100
71088	TGV 30 42,4	908,00	100
71089	TGV 30 48,3	1.273,00	100
71090	TGV 30 60,3	5.309,00	100

TGV 31 - short T-joint 90° pluggable

hot dip galvanized

item number	designation	price Euro	price per
71091	TGV 31 33,7	1.088,00	100
71092	TGV 31 42,4	1.107,00	100
71093	TGV 31 48,3	1.126,00	100

TGV 32 - T-joint 90° open

hot dip galvanized

item number	designation	price Euro	price per
71094	TGV 32 26,9	755,00	100
71095	TGV 32 33,7	1.011,00	100
71096	TGV 32 42,4	1.203,00	100
71097	TGV 32 48,3	1.295,00	100
71098	TGV 32 60,3	5.845,00	100

malleable iron pipe fittings

product group discount: 9024

TGV 34 - centre console

hot dip galvanized

item number	designation	price Euro	price per
71099	TGV 34 26,9	576,00	100
71100	TGV 34 33,7	601,00	100
71101	TGV 34 42,4	883,00	100
71102	TGV 34 48,3	1.056,00	100

TGV 36 - single joint

hot dip galvanized

item number	designation	price Euro	price per
71103	TGV 36 26,9	416,00	100
71104	TGV 36 33,7	390,00	100
71105	TGV 36 42,4	480,00	100
71106	TGV 36 48,3	627,00	100
71107	TGV 36 60,3	992,00	100

TGV 38 - double joint

hot dip galvanized

item number	designation	price Euro	price per
71108	TGV 38 26,9	2.485,00	100
71109	TGV 38 33,7	646,00	100
71110	TGV 38 42,4	691,00	100
71111	TGV 38 48,3	716,00	100
71112	TGV 38 60,3	1.248,00	100

malleable iron pipe fittings

product group discount: 9024

TGV 40 - double joint 90°

hot dip galvanized

item number	designation	price Euro	price per
71113	TGV 40 26,9	2.306,00	100
71114	TGV 40 33,7	780,00	100
71115	TGV 40 42,4	876,00	100
71116	TGV 40 48,3	985,00	100

TGV 42 - head joint

hot dip galvanized

item number	designation	price Euro	price per
71117	TGV 42 26,9	448,00	100
71118	TGV 42 33,7	454,00	100
71119	TGV 42 42,4	614,00	100
71120	TGV 42 48,3	684,00	100
71121	TGV 42 60,3	1.619,00	100

TGV 44 - single linking joint

hot dip galvanized

item number	designation	price Euro	price per
71122	TGV 44 26,9	921,00	100
71123	TGV 44 33,7	883,00	100
71124	TGV 44 42,4	1.081,00	100
71125	TGV 44 48,3	1.222,00	100
71126	TGV 44 60,3	2.483,00	100

malleable iron pipe fittings

product group discount: 9024

TGV 46 - double linking joint

hot dip galvanized

item number	designation	price Euro	price per
71127	TGV 46 26,9	1.708,00	100
71128	TGV 46 33,7	1.632,00	100
71129	TGV 46 42,4	1.913,00	100
71130	TGV 46 48,3	2.144,00	100

TGV 48 - double linking joint 90°

hot dip galvanized

item number	designation	price Euro	price per
71133	TGV 48 33,7	1.760,00	100
71134	TGV 48 42,4	2.099,00	100
71135	TGV 48 48,3	2.310,00	100

TGV 50 - flange plate for joint coupling

hot dip galvanized

item number	designation	price Euro	price per
71136	TGV 50 26,9	1.529,00	100
71137	TGV 50 33,7	864,00	100
71138	TGV 50 42,4	864,00	100
71139	TGV 50 48,3	864,00	100
71140	TGV 50 60,3	864,00	100

malleable iron pipe fittings

product group discount: 9024

TGV 52 - flange plate with joint

hot dip galvanized

item number	designation	price Euro	price per
71141	TGV 52 26,9	1.075,00	100
71142	TGV 52 33,7	1.068,00	100
71143	TGV 52 42,4	1.184,00	100
71144	TGV 52 48,3	1.280,00	100
71145	TGV 52 60,3	5.859,00	100

TGV 58 - support ring for pipe connector

hot dip galvanized

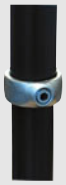

item number	designation	price Euro	price per
71147	TGV 58 33,7	409,00	100
71148	TGV 58 42,4	454,00	100
71149	TGV 58 48,3	485,00	100

TGV 60 - hinge mount

hot dip galvanized

item number	designation	price Euro	price per
71150	TGV 60 26,9	499,00	100
71151	TGV 60 33,7	518,00	100
71152	TGV 60 42,4	531,00	100
71153	TGV 60 48,3	550,00	100

malleable iron pipe fittings

product group discount: 9024

TGV 62 - hinge bolt

hot dip galvanized

item number	designation	price Euro	price per
71154	TGV 62 26,9	601,00	100
71155	TGV 62 33,7	588,00	100
71156	TGV 62 42,4	601,00	100
71157	TGV 62 48,3	630,00	100

TGV 64 - hook

hot dip galvanized

item number	designation	price Euro	price per
71159	TGV 64 33,7	422,00	100
71160	TGV 64 42,4	524,00	100
71161	TGV 64 48,3	576,00	100

TGV 66 - connector open

hot dip galvanized

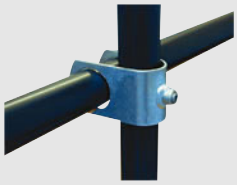

item number	designation	price Euro	price per
71162	TGV 66 26,9	1.736,00	100
71163	TGV 66 33,7	1.792,00	100
71165	TGV 66 42,4	1.876,00	100
71168	TGV 66 48,3	2.018,00	100

malleable iron pipe fittings

product group discount: 9024

TGV 70 - single sided clamp connection

hot dip galvanized

item number	designation	price Euro	price per
71172	TGV 70 26,9	192,00	100
71173	TGV 70 33,7	179,00	100
71174	TGV 70 42,4	198,00	100
71175	TGV 70 48,3	230,00	100

TGV 72 - double sided clamp connection

hot dip galvanized

item number	designation	price Euro	price per
71178	TGV 72 33,7	294,00	100
71179	TGV 72 42,4	294,00	100
71180	TGV 72 48,3	300,00	100

TGV G02 - T-connector short, adjustable 4°-10°

hot dip galvanized

item number	designation	price Euro	price per
71182	TGV G02 48,3	1.209,00	100

malleable iron pipe fittings

product group discount: 9024

TGV G04 - T-connector long, adjustable 4°-10°

hot dip galvanized

item number	designation	price Euro	price per
71183	TGV G04 48,3	1.516,00	100

TGV G06 - knee, adjustable 4°-10°

hot dip galvanized

item number	designation	price Euro	price per
71184	TGV G06 48,3	1.356,00	100

TGV G12 - foot plate, adjustable 4°-10°

hot dip galvanized

item number	designation	price Euro	price per
71185	TGV G12 48,3	1.792,00	100

malleable iron pipe fittings

product group discount: 9024

TGV G22 - cross connector, adjustable 4°-10°

hot dip galvanized

item number	designation	price Euro	price per
71186	TGV G22 48,3	1.561,00	100

threaded pipe DIN 2444

hot dip galvanized

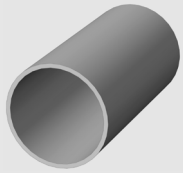

item number	designation	price Euro	price per
71250	threaded pipe welded 26,9 x 2,65 mm	477,00	100
71251	threaded pipe welded 33,7 x 3,25 mm	735,00	100
71252	threaded pipe welded 42,4 x 3,25 mm	945,00	100
71253	threaded pipe welded 48,3 x 3,25 mm	1.089,00	100
71254	threaded pipe welded 60,3 x 3,65 mm	1.536,00	100

plastic end cap

for welded, galvanized threaded pipes

item number	designation	price Euro	price per
71260	plastic end cap 26,9 x 21,6 mm	180,00	100
71261	plastic end cap 33,7 x 27,0 mm	57,00	100
71262	plastic end cap 42,4 x 35,9 mm	70,00	100
71263	plastic end cap 48,3 x 41,8 mm	90,00	100
71264	plastic end cap 60,3 x 53,0 mm	108,00	100

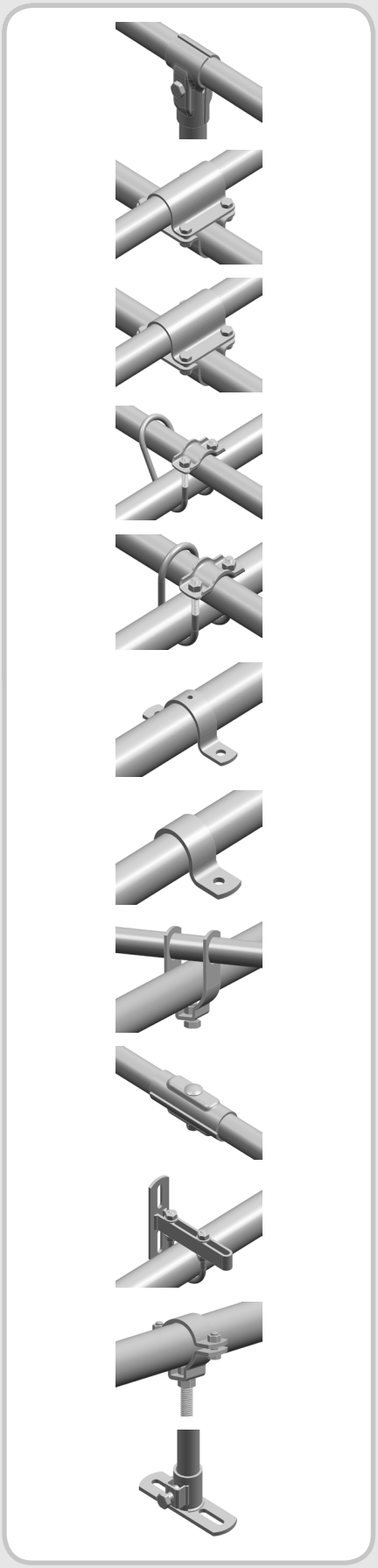

clamps for agricultural machines and stable facilities

T-clamp parted
cross clamp wide
full clamp
half clamp/one-pipe clamp
pipe clamp with nut block
iron u-clamp open
iron u-clamp closed
u-bolt for sliding bracket
u-bolt
cross connector
pipe connector exterior
sliding bracket
pipe wall bracket with nut block

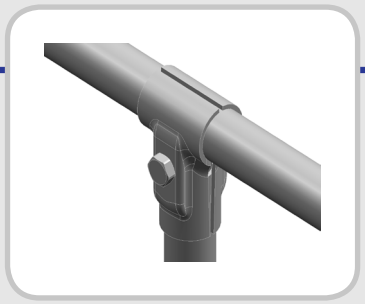

clamps for agricultural machines and stable facilities

The following products can only be ordered on a yearly basis.
Prices upon request.

T-clamp parted	material S235JR, hot dip galvanized
cross clamp wide	material S235JR, hot dip galvanized
full clamp	material S235JR, hot dip galvanized
half clamp/one-pipe clamp	material S235JR, hot dip galvanized
pipe clamp with nut block	material S235JR, hot dip galvanized or 1.4301/A2
iron u-clamp open	material S235JR, hot dip galvanized
iron u-clamp closed	material S235JR, hot dip galvanized
u-bolt for sliding bracket	material S235JR, hot dip galvanized or 1.4301/A2
u-bolt	material S235JR, hot dip galvanized
cross connector	material S235JR, hot dip galvanized
pipe connector exterior	material S235JR, hot dip galvanized
sliding bracket	material 1.4301/A2
pipe wall bracket with nut block	material S235JR, hot dip galvanized

norms: see attachment 4.0 and 4.1

T-clamp parted

material S235JR, hot dip galvanized
without screwing
(If required please order them separately.)
product group discount: 90141

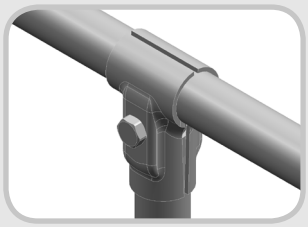

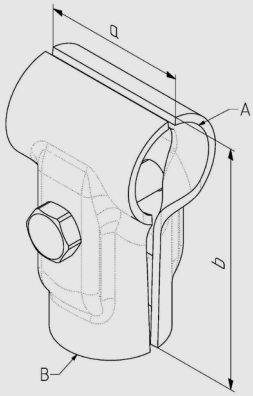

item number	designation	a	b	screwing
70141	T-clamp parted A x B 21 x 21 mm, 1/2“ x 1/2“	35	68	8x35
70142	T-clamp parted A x B 27 x 21 mm, 3/4“ x 1/2“	35	78	8x40
70143	T-clamp parted A x B 27 x 27 mm, 3/4“ x 3/4“	45	78	8x50
70144	T-clamp parted A x B 33 x 21 mm, 1“ x 1/2“	35	83	8x40
70145	T-clamp parted A x B 33 x 27 mm, 1“ x 3/4“	45	86	10x50
70146	T-clamp parted A x B 33 x 33 mm, 1“ x 1“	55	90	10x55
70147	T-clamp parted A x B 42 x 27 mm, 1 1/4“ x 3/4“	45	97	10x50
70148	T-clamp parted A x B 42 x 33 mm, 1 1/4“ x 1“	55	105	10x60
70149	T-clamp parted A x B 42 x 42 mm, 1 1/4“ x 1 1/4“	65	107	10x70
70150	T-clamp parted A x B 48 x 27 mm, 1 1/2“ x 3/4“	45	108	10x50
70151	T-clamp parted A x B 48 x 33 mm, 1 1/2“ x 1“	55	115	10x60
70152	T-clamp parted A x B 48 x 42 mm, 1 1/2“ x 1 1/4“	65	115	10x70
70153	T-clamp parted A x B 48 x 48 mm, 1 1/2“ x 1 1/2“	75	120	12x75
70154	T-clamp parted A x B 48 x 60 mm, 1 1/2“ x 2“	95	125	12x85
70155	T-clamp parted A x B 60 x 33 mm, 2“ x 1“	55	130	10x55
70156	T-clamp parted A x B 60 x 42 mm, 2“ x 1 1/4“	65	125	10x70
70157	T-clamp parted A x B 60 x 48 mm, 2“ x 1 1/2“	75	135	12x75
70158	T-clamp parted A x B 60 x 60 mm, 2“ x 2“	95	136	12x85

cross clamp wide

material S235JR, hot dip galvanized
without screwing
(If required please order them separately.)
product group discount: 90141

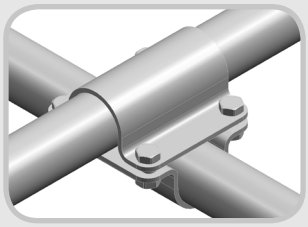

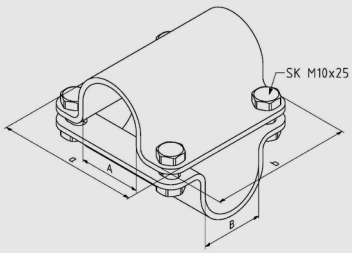

item number	designation	a	b	screwing
70244	cross clamp wide A x B 42 x 42 mm, 1 1/4“ x 1 1/4“	110	110	10x25
70245	cross clamp wide A x B 48 x 42 mm, 1 1/2“ x 1 1/4“	110	110	10x25
70246	cross clamp wide A x B 48 x 48 mm, 1 1/2“ x 1 1/2“	140	140	10x25
70247	cross clamp wide A x B 48 x 76 mm, 1 1/2“ x 2 1/2“	140	140	10x25
70248	cross clamp wide A x B 48 x 60 mm, 1 1/2“ x 2“	140	140	10x25
70249	cross clamp wide A x B 60 x 60 mm, 2“ x 2“	140	140	10x25
70250	cross clamp wide A x B 70 x 48 mm, 70 x 1 1/2“	140	140	10x25
70251	cross clamp wide A x B 70 x 60 mm, 70 x 2“	140	140	10x25
70252	cross clamp wide A x B 70 x 76 mm, 70 x 2 1/2“	140	140	10x25
70253	cross clamp wide A x B 76 x 60 mm, 2 1/2“ x 2“	140	140	10x25
70254	cross clamp wide A x B 76 x 76 mm, 2 1/2“ x 2 1/2“	140	140	10x25
70255	cross clamp wide A x B 80 x 48 mm, 80 x 1 1/2“	155	155	10x25
70256	cross clamp wide A x B 60 x 42 mm, 2“ x 1 1/4“	140	140	10x25

full clamp

material S235JR, hot dip galvanized
without screwing
product group discount: 90141

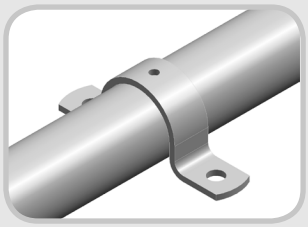

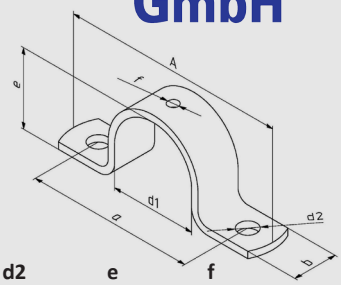

item number	designation	d1	A	b	a	d2	e	f
70197	full clamp D=21 mm, 1/2“	21	81	25	56	9	18	
70198	full clamp D=27 mm, 3/4“	27	88	25	62	9	24	
70199	full clamp D=34 mm, 1“	34	97	25	74	9	28	6,2
70200	full clamp D=43 mm, 1 1/4“	43	130	25	99	11	37	6,2
70201	full clamp D=49 mm, 1 1/2“	49	125	25	94	11	44	6,2
70202	full clamp D=60 mm, 2“	60	140	25	110	11	55	6,2
70203	full clamp D=76 mm, 2 1/2“	76	160	40	121	13	70	

half clamp/one-pipe clamp

material S235JR, hot dip galvanized
without screwing
product group discount: 90141

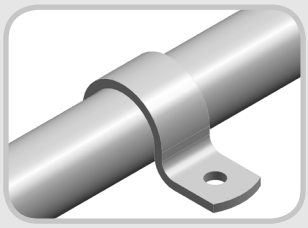

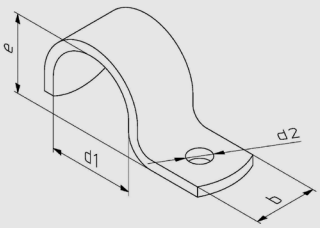

item number	designation	d1	e	b	d2
70181	half clamp/one pipe clamp D=21 mm, 1/2“	21	19	25	9
70182	half clamp/one pipe clamp D=27 mm, 3/4“	27	24	25	9
70183	half clamp/one pipe clamp D=34 mm, 1“	34	31	25	9
70184	half clamp/one pipe clamp D=43 mm, 1 1/4“	43	38	25	11
70185	half clamp/one pipe clamp D=49 mm, 1 1/2“	49	45	25	11

pipe clamp with nut block

material 1.4301/A2
clamp with pre-assembled clamp screw,
terminal nuts loose
product group discount: 90141

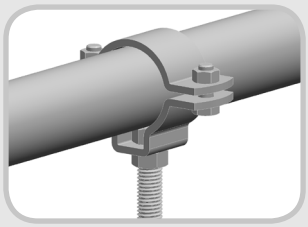

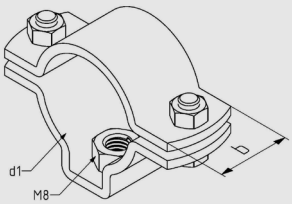

item number	designation	d1	b	screwing	connecting nut
70192	pipe clamp with nut block for D=34 mm, 1“	34	25	8x25	M8
70193	pipe clamp with nut block for D=40-43 mm, 1 1/4“	40-43	25	8x25	M8
70194	pipe clamp with nut block for D=49-53 mm, 1 1/2“	49-53	25	8x25	M8
70195	pipe clamp with nut block for D=60-63 mm, 2“	60-63	25	8x25	M8
70196	pipe clamp with nut block for D=68-70 mm	68-70	25	8x25	M8

iron u-clamp open

material S235JR, hot dip galvanized
with clamp and 2 nuts in hot dip
galvanized pre-asssembled
product group discount: 90142

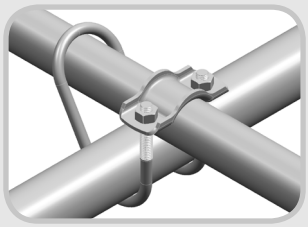

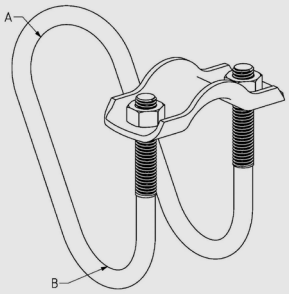

item number	designation	A	B	M
70204	iron u-clamp open A x B 21 x 21 mm, 1/2“ x 1/2“	21	21	8
70205	iron u-clamp open A x B 27 x 27 mm, 3/4“ x 3/4“	27	27	8
70206	iron u-clamp open A x B 27 x 33 mm, 3/4“ x 1“	27	33	8
70207	iron u-clamp open A x B 27 x 60 mm, 3/4“ x 2“	27	60	8
70208	iron u-clamp open A x B 33 x 21 mm, 1“ x 1/2“	33	21	8
70209	iron u-clamp open A x B 33 x 33 mm, 1“ x 1“	33	33	8
70210	iron u-clamp open A x B 33 x 42 mm, 1“ x 1 1/4“	33	42	8
70211	iron u-clamp open A x B 33 x 48 mm, 1“ x 1 1/2“	33	48	8
70212	iron u-clamp open A x B 33 x 60 mm, 1“ x 2“	33	60	8
70213	iron u-clamp open A x B 33 x 76 mm, 1“ x 2 1/2“	33	76	8
70214	iron u-clamp open A x B 42 x 42 mm, 1 1/4“ x 1 1/4“	42	42	10
70215	iron u-clamp open A x B 42 x 48 mm, 1 1/4“ x 1 1/2“	42	48	10
70216	iron u-clamp open A x B 42 x 60 mm, 1 1/4“ x 2“	42	60	10
70217	iron u-clamp open A x B 48 x 48 mm, 1 1/2“ x 1 1/2“	48	48	10
70218	iron u-clamp open A x B 48 x 60 mm, 1 1/2“ x 2“	48	60	10
70219	iron u-clamp open A x B 60 x 27 mm, 2“ x 3/4“	60	27	10
70220	iron u-clamp open A x B 60 x 48 mm, 2“ x 1 1/2“	60	48	10
70221	iron u-clamp open A x B 60 x 60 mm, 2“ x 2“	60	60	10
70222	iron u-clamp open A x B 76 x 48 mm, 2 1/2“ x 1 1/2“	76	48	10

iron u-clamp closed

material S235JR, hot dip galvanized
with clamp and 2 nuts in hot dip galvanized pre-asssembled
product group discount: 90142

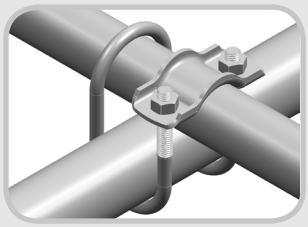

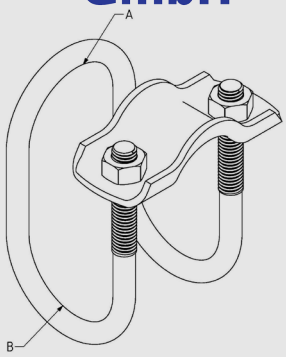

item number	designation	A	B	M
70223	iron u-clamp closed A x B 21 x 21 mm, 1/2“ x 1/2“	21	21	8
70224	iron u-clamp closed A x B 27 x 27 mm, 3/4“ x 3/4“	27	27	8
70225	iron u-clamp closed A x B 27 x 33 mm, 3/4“ x 1“	27	33	8
70226	iron u-clamp closed A x B 27 x 60 mm, 3/4“ x 2“	27	60	8
70227	iron u-clamp closed A x B 33 x 33 mm, 1“ x 1“	33	33	8
70228	iron u-clamp closed A x B 33 x 42 mm, 1“ x 1 1/4“	33	42	8
70229	iron u-clamp closed A x B 33 x 48 mm, 1“ x 1 1/2“	33	48	8
70230	iron u-clamp closed A x B 33 x 60 mm, 1“ x 2“	33	60	8
70231	iron u-clamp closed A x B 33 x 76 mm, 1“ x 2 1/2“	33	76	8
70232	iron u-clamp closed A x B 42 x 42 mm, 1 1/4“ x 1 1/4“	42	42	10
70233	iron u-clamp closed A x B 42 x 48 mm, 1 1/4“ x 1 1/2“	42	48	10
70234	iron u-clamp closed A x B 42 x 60 mm, 1 1/4“ x 2“	42	60	10
70235	iron u-clamp closed A x B 48 x 48 mm, 1 1/2“ x 1 1/2“	48	48	10
70236	iron u-clamp closed A x B 48 x 60 mm, 1 1/2“ x 2“	48	60	10
70237	iron u-clamp closed A x B 60 x 27 mm, 2“ x 3/4“	60	27	10
70238	iron u-clamp closed A x B 60 x 60 mm, 2“ x 2“	60	60	10
70239	iron u-clamp closed A x B 60 x 48 mm, 2“ x 1 1/2“	60	48	10
70240	iron u-clamp closed A x B 60 x 42 mm, 2“ x 1 1/4“	60	42	10

u-bolt for sliding bracket

material S235JR, hot dip galvanized
incl. 4 nuts and 4 washers in hot dip galvanized pre-assembled
nuts DIN 934, washer AD = 20 mm,
ID = 8,4 mm, thickness = 2 mm
product group discount: 90142

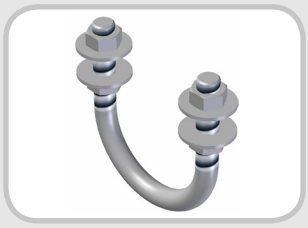

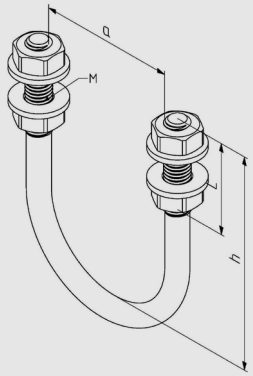

item number	designation	a	h	L	M
70170	RB for sliding bracket D=42 mm, 1 1/4“	43	87	35	8
70171	RB for sliding bracket D=48 mm, 1 1/2“	53	100	35	8
70172	RB for sliding bracket D=61 mm, 2“	65	108	35	8

u-bolt

material S235JR, hot dip galvanized or A2
incl. 2 nuts in hot dip galvanized pre-assembled
in A2 without screwing
product group discount: 90142

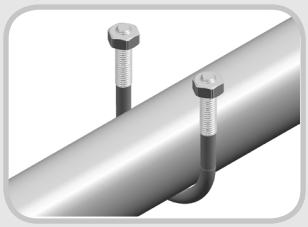

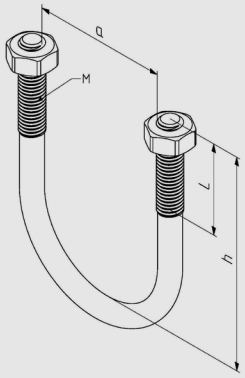

item number	designation	a	h	screwing	L
70280	u-bolt LW 22 x 40, hdg	22	40	8x25	25
70281	u-bolt LW 28 x 47, hdg	28	47	8x30	30
70134	u-bolt LW 36 x 52, hdg	36	52	8x20	20
70111	u-bolt LW 42 x 62, hdg	42	62	8x30	30
70112	u-bolt LW 50 x 70, hdg	50	70	8x35	35
70285	u-bolt LW 75 x 110, hdg	75	110	8x35	35
70113	u-bolt LW 82 x 100, hdg	82	100	8x30	30
70286	u-bolt LW 85 x 100, hdg	85	100	8x35	35
70282	u-bolt LW 43 x 64, hdg	43	64	10x40	40
70279	u-bolt LW 49 x 95, hdg	49	95	10x30	30
70277	u-bolt LW 50 x 70, hdg	50	70	10x30	30
70115	u-bolt LW 50 x 90, hdg	50	90	10x30	30
70278	u-bolt LW 61 x 80, hdg	61	80	10x30	30
70116	u-bolt LW 63 x 108, hdg	63	108	10x40	40
70117	u-bolt LW 70 x 107, hdg	70	107	10x40	40
70118	u-bolt LW 70 x 120, hdg	70	120	10x40	40
70284	u-bolt LW 80 x 95, hdg	80	95	10x30	30
70119	u-bolt LW 63 x 90, hdg	63	90	12x30	30
70120	u-bolt LW 40 x 150, hdg	40	150	12x115	115
70283	u-bolt LW 90 x 115, hdg	90	115	12x115	115

item number	designation	a	h	screwing	L
70121	u-bolt LW 63 x 140, A2	63	140	8x50	50
70122	u-bolt LW 63 x 120, A2	63	120	8x50	50
70123	u-bolt LW 80 x 140, A2	80	140	8x40	40
70124	u-bolt LW 36 x 47, A2	36	47	8x20	20
70125	u-bolt LW 36 x 95, A2	36	95	8x65	65
70126	u-bolt LW 36 x 130, A2	36	130	8x80	80
70127	u-bolt LW 63 x 90, A2	63	90	8x50	50
70128	u-bolt LW 36 x 55, A2	36	55	8x20	20
70287	u-bolt LW 36 x 50, A2	36	50	8x20	20
70288	u-bolt LW 36 x 90, A2	36	90	8x30	30
70289	u-bolt LW 75 x 125, A2	75	125	8x35	35

cross connector

material S235JR, hot dip galvanized or A2
incl. screw and nut M8x20
in hot dip galvanized or in A2
product group discount: 90143

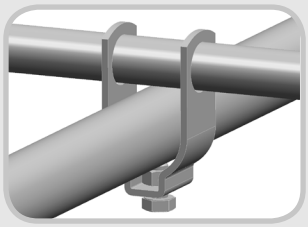

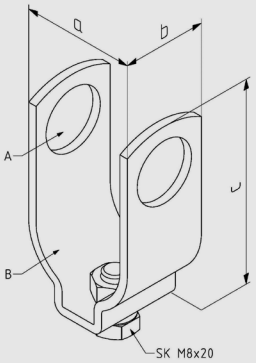

item number	designation	a	b	c
70173	cross-connector A x B 21 x 33 mm, 1/2“ x 1“, hdg	44	30	75
70174	cross-connector A x B 21 x 42 mm, 1/2“ x 1 1/4“, hdg	50	35	83
70175	cross-connector A x B 21 x 48 mm, 1/2“ x 1 1/2“, hdg	56	35	93
70176	cross-connector A x B 21 x 60 mm, 1/2“ x 2“, hdg	74	35	100

item number	designation	a	b	c
70177	cross-connector A x B 21 x 33 mm, 1/2“ x 1“, A2	44	30	75
70178	cross-connector A x B 21 x 42 mm, 1/2“ x 1 1/4“, A2	50	35	83
70179	cross-connector A x B 21 x 48 mm, 1/2“ x 1 1/2“, A2	56	35	93
70180	cross-connector A x B 21 x 60 mm, 1/2“ x 2“, A2	74	35	100

pipe connector exterior

material S235JR, hot dip galvanized
incl. screw DIN 603 and nut DIN 934
in hot dip galvanized
product group discount: 90143

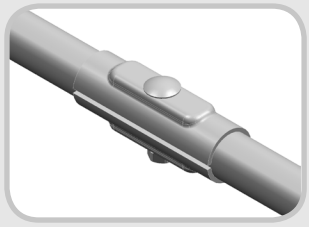

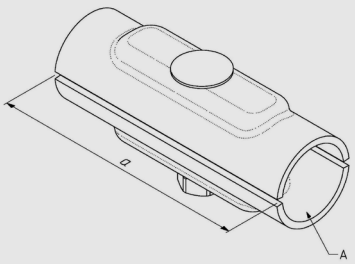

item number	designation	a	screwing
70257	pipe connector exterior for pipe 21 mm, 1/2“	100	8x35
70258	pipe connector exterior for pipe 27 mm, 3/4“	100	10x50
70259	pipe connector exterior for pipe 34 mm, 1“	120	10x50
70260	pipe connector exterior for pipe 42 mm, 1 1/4“	120	10x60
70261	pipe connector exterior for pipe 48 mm, 1 1/2“	120	10x70
70262	pipe connector exterior for pipe 60 mm, 2“	150	12x80

sliding bracket

material S235JR hot dip galvanized
2 mounting holes 10x40 mm
product group discount: 90144

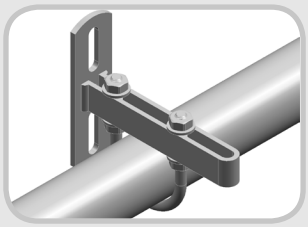

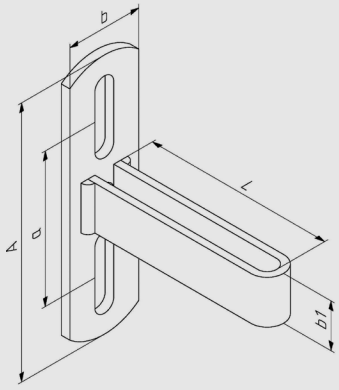

item number	designation	L	Axb	a	b1
70160	sliding bracket L=100 mm	100	140x40	80	25
70161	sliding bracket L=150 mm	150	140x40	80	25
70162	sliding bracket L=200 mm	200	140x40	80	25
70163	sliding bracket L=250 mm	250	140x40	80	25
70164	sliding bracket L=300 mm	300	140x40	80	25
70165	sliding bracket L=400 mm	400	140x40	80	25
70166	sliding bracket L=500 mm	500	140x40	80	25
70167	sliding bracket L=600 mm	600	140x40	80	25
70168	sliding bracket L=700 mm	700	140x40	80	25
70169	sliding bracket L=750 mm	750	140x40	80	25

pipe wall bracket with nut block

material S235JR, hot dip galvanized
nut and screw M10x25 pre-assembled
2 mounting holes 10x40 mm
product group discount: 90144

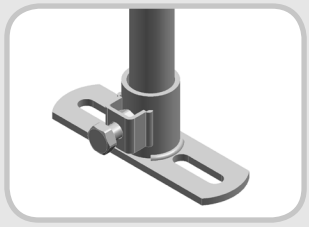

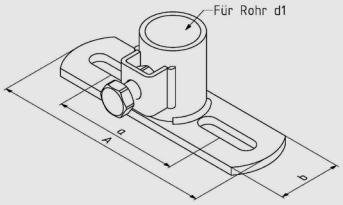

item number	designation	A	a	b
70186	pipe wall bracket with nut block D=21 mm, 1/2“	140	80	40
70187	pipe wall bracket with nut block D=27 mm, 3/4“	140	80	40
70188	pipe wall bracket with nut block D=34 mm, 1“	160	100	40
70189	pipe wall bracket with nut block D=42 mm, 1 1/4“	160	100	40
70190	pipe wall bracket with nut block D=48 mm, 1 1/2“	160	100	40
70191	pipe wall bracket with nut block D=60 mm, 2“	160	100	40