2710 TENSION AND COMPRESSION LOAD CELL

Universal load cell combining accuracy, sturdiness and easiness to install.

Model 2710 - 50 kN

Features

- Stainless steel
- Protection IP 67
- Compact design
- Available options (non exhaustive list):
  - o ATEX intrinsic safety Ex II 1GD Ex ia IIC T6 or T4 Ga Ex ia IIIC T80 C Da
  - o cable output by connector
  - o high service temperature (180 C)

Applications

The SENSY's load cell 2710 is perfectly designed to the following applications :

- Industrial force measurement
- Weighing of suspended reactors or hoppers
- Weighing of conveyor belts
- Hybrid weighbridges (mechanical conversion)

Capacities

2710 : (5) - (7.5) - 10 - (15) - 20 - (30) - 50 kN

Specifications	0.1	0.03	
Accuracy class	1000 d	3000 d	-
Combined error	< ± 0.10	< ± 0.03	% F.S.
Linearity error	< ± 0.10	< ± 0.025	% F.S.
Repeatability error	< ± 0.03	< ± 0.015	% F.S.
Creep error over 30 min.	< ± 0.06	< ± 0.025	% F.S.
Zero shift after loading	< ± 0.015	< ± 0.0075	% F.S.
Reference temperature	23	23	C
Nominal temperature range	-10...+45	-10...+45	C
Service temperature range	-30...+70	-30...+70	C
Storage temperature range	-50...+85	-50...+85	C
Temperature coefficient of the sensitivity	< ± 0.05	< ± 0.015	% F.S./10 C
Temperature coefficient of zero signal	< ± 0.035	< ± 0.023	% F.S./10 C
Zero balance	± 0.02	± 0.02	mV/V
Sensitivity tolerance	< ± 0.3	< ± 0.2	%
Input resistance	352 ± 2	352 ± 2	Ohm
Output resistance	352 ± 2	352 ± 2	Ohm
Insulation resistance (50V)	> 5000	> 5000	Megaohm
Reference excitation voltage	10	10	VDC
Nominal range of excitation voltage	3..12	3..12	VDC
Nominal sensitivity	2	2	mV/V
Safe load limit	120	120	% F.S.
Breaking load	>300	>300	% F.S.
Static lateral force limit	50	50	% F.S.
Permissible dynamic loading	60	60	% F.S.

F.S.: full scale - Specifications subject to change without notice

www.sensy.com

LOAD CELL

model 2710 stainless steel

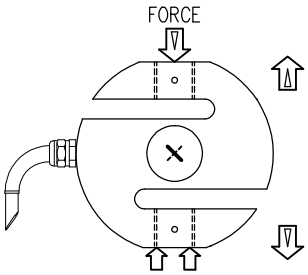

TENSION–COMPRESSION

Range (5 – 50 kN) / (500 – 5000 kg) IP67

Cable length : 3 m

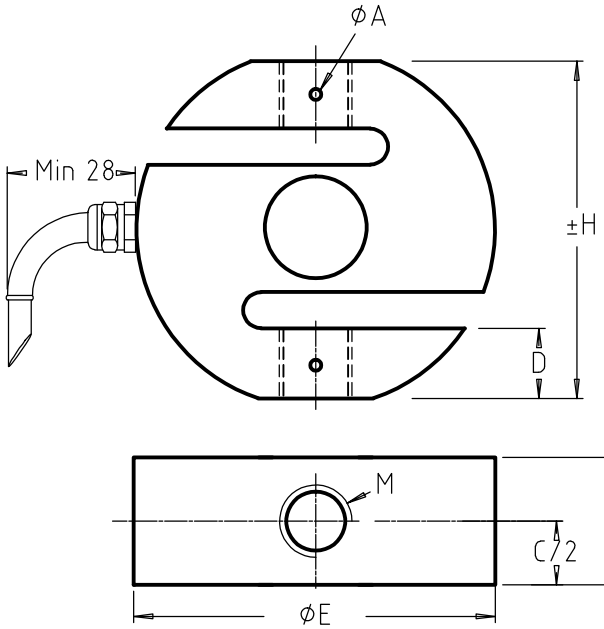

MODEL	CAPACITIES	ØA	H	C	D	ØE	M	H1	H2	Max.deflexion	Weight
2710	5 –15 kN	4	76	28	16	79	M16	177	222	0.30 mm	0.85 kg
2710	20–50 kN		116	38	30	128	M24x2	238	302	0.35 mm	2.6 kg

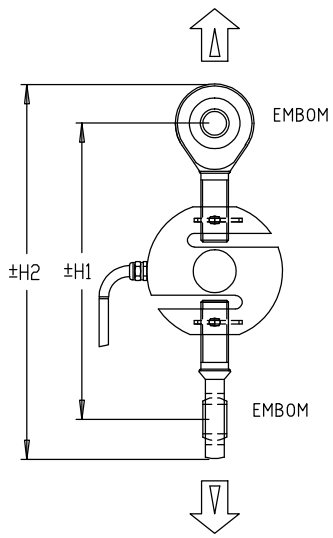

Note:Standard wiring for compression

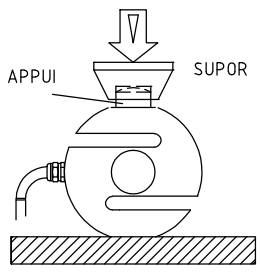

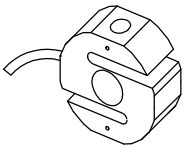

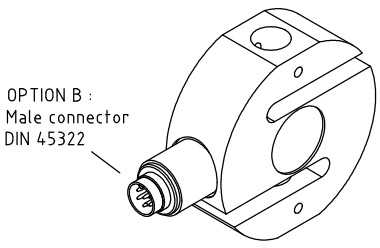

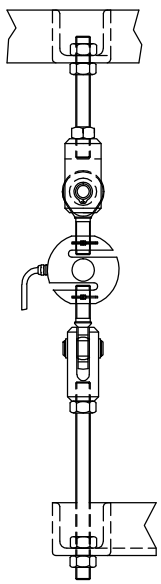

Rev.4/1/2010