EN

Superior with Solids

SWR

Nico 15/30

Radar sensor for continuous level measurement of bulk materials

Product information

SWR engineering Messtechnik GmbH PART OF THE ENVIRONNEMENT S.A GROUP

Application

The Nico 15 and Nico 30 radar sensors have been designed to continuously measure the level of materials in storage vessels under difficult process conditions.

They can be used on a wide range of different materials having varying particle sizes and compositions.

The measurement is unaffected by dusty atmospheres, obstructions or temperature variations. The Nico 15 measuring range is 15 metres and the Nico 30, 30 metres. The good signal focus ensures that vessel fittings and encrustations on the walls does not affect the measurement.

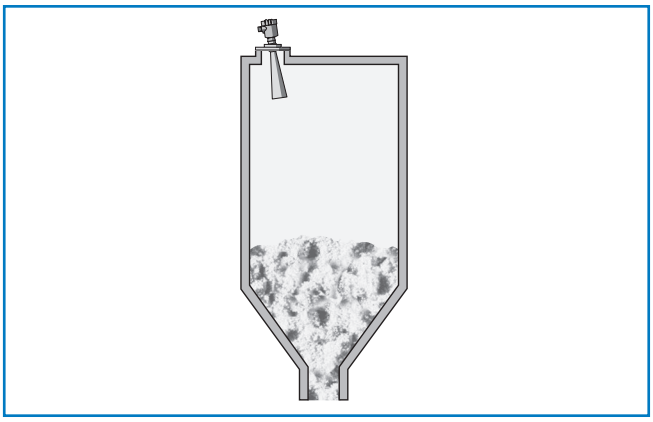

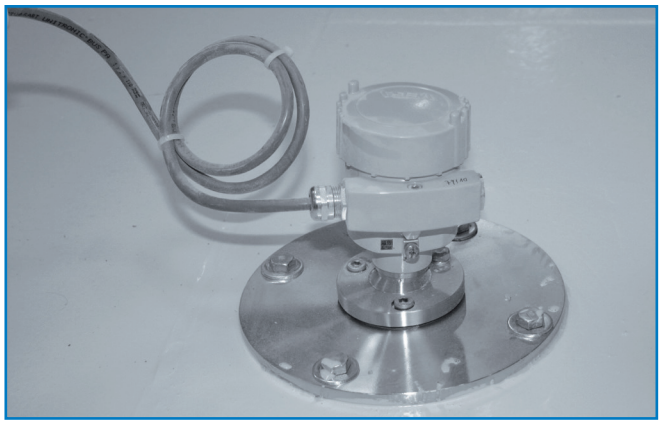

System description

Extremely short microwave pulses are transmitted via the antenna system, to the material to be measured, the pulses are reflected by the surface of the material, and received back to the antenna system.
The time taken between the transmission of the pulses and receiving the pulses, is proportional to the level in the vessel.

Because the pulses are travelling so fast, and difficult to process, a procedure is adopted to allow for the processing of the pulses. The pulses are transmitted in the K-band frequency range, where its usage is time proven.
The transmitted power is well below the IEC specifications. There is no need to calibrate the vessel whether empty or full.

System selection

The sensors are compact and do not need a transmitter. The device selection is made on the basis of range and process conditions. Both models are available in twin-conductor and quad-conductor versions.

		Nico 15	Nico 30
Container	Small to medium containers	●	●
	Medium to large containers	-	●
Process	Simple process conditions	●	●
	Very difficult process conditions	-	●
Installation	Thread connectors	-	●
	Flange connectors	●	●
	Installation bar	●	-
Antenna	Pivot-mounted bracket	●	●
	Parabolic antenna	-	-
	Purging air connector	-	●

Assembly and installation

Measurements with flange installation

The Nico 15 is supplied with a DN 80 flange, which is installed on the vassel using an identical flange.

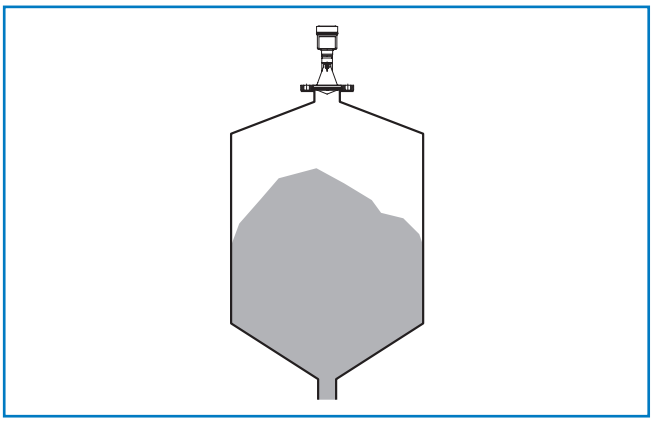

Measurements using the pivot-mounted bracket

If it is not possible to install the sensor in the centre of the silo, it can be directed towards the centre using an optional pivot-mounted bracket.
The illustration below provides a simple overview of how to determine the required angle.

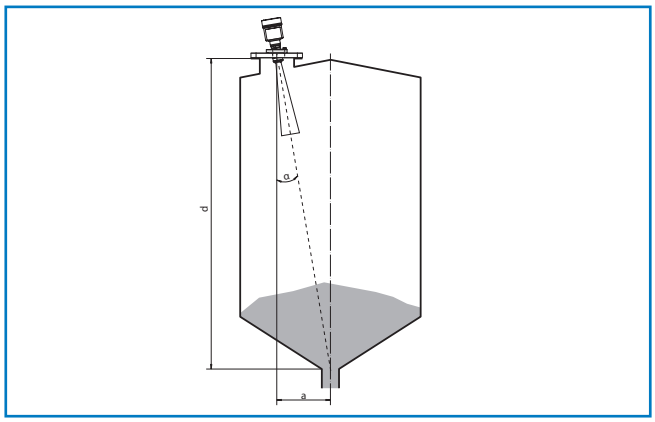

Measurements with installation arm

The installation arm allows the sensors to be installed easily on the silo wall or roof.

This is a very simple and effective method to direct the sensor towards the
surface of the bulk goods, particularly for open silos.

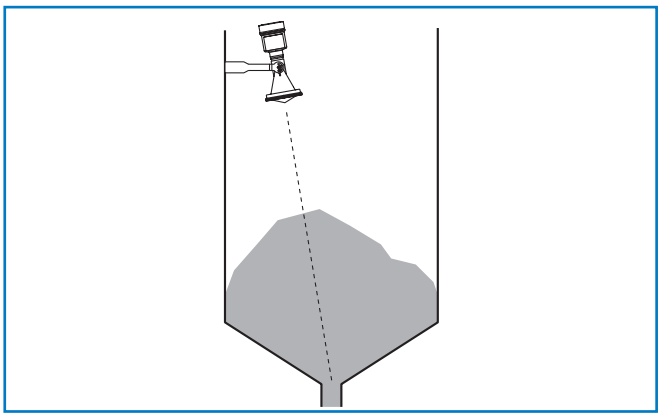

Operation

The display and control module must be used to calibrate the sensor.

The plug-in module is used to display measurements and for control and diagnostic purposes. It features an illuminated display and appropriate control keys.

Technical data

	Nico 15	Nico 30
Applications	Bulk goods	Bulk goods in very difficult process conditions
Max. measuring range	15 m (49.21 ft)	30 m (98.43 ft)
Antenna / Material	Completely encapsulated plastic horn antenna / PVDF	Horn antenna / 316L
Process connector / Material	Installation bar / 316L or flange / PP	Thread G1½A / 316L to DIN 3852-A or flange / 316L
Process temperature	- 40 . . . + 80 °C	- 40 . . . + 250 °C
Process pressure	- 1 . . . + 2 bar / - 100 . . . + 200 kPa	- 1 . . . + 100 bar / - 100 . . . + 10000 kPa
Measurement tolerance	± 2 mm	± 2 mm
Frequency range	K-band	K-band
Signal output	▪ 4 . . 20 mA / HART twin-conductor ▪ 4 . . 20 mA / HART quad-conductor	▪ 4 . . 20 mA / HART twin-conductor ▪ 4 . . 20 mA / HART quad-conductor

Nico 15

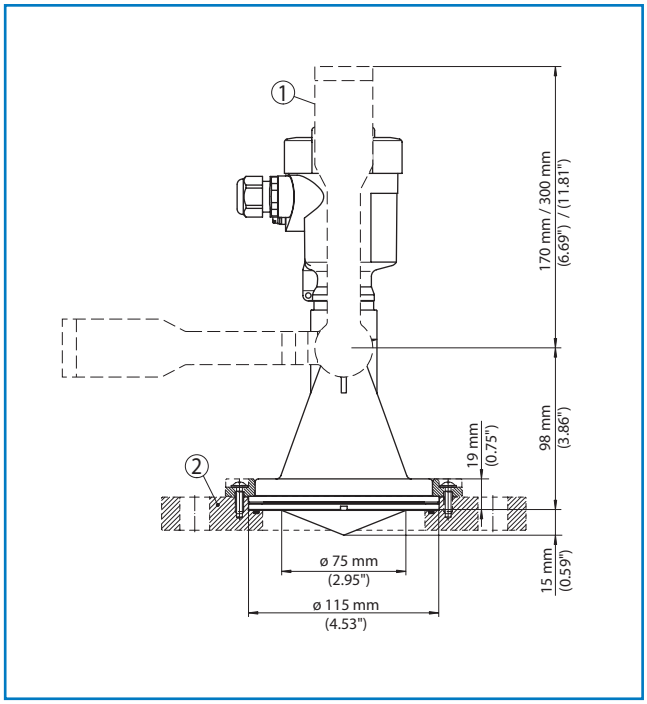

Nico 30

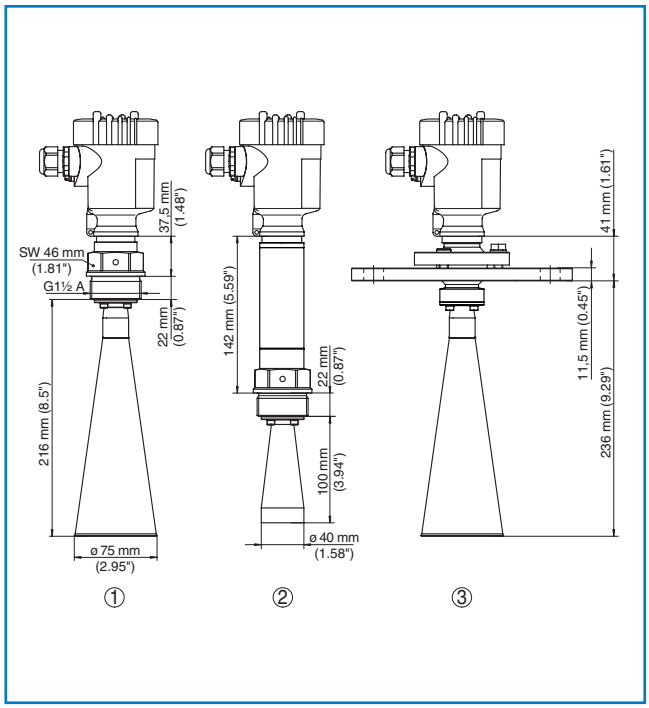

Superior with Solids SWR

SWR engineering Messtechnik GmbH
Gutedelstraße 31 · 79418 Schliengen (Germany)
Fon +49 7635 827248-0 · Fax +49 7635 827248-48 · www.swr-engineering.com

(Subject to technical changes at any time.)