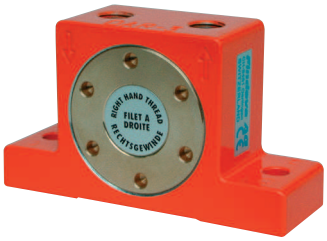

Roller Vibrators DAR

Roller vibrators, especially for concrete and other heavy-duty applications. Wide range.

Properties

- High torque
- Rated frequency 7’800 – 38'000 rpm
- Centrifugal force 1’680 – 12’000 N
- Continuously variable
- Can be used up to 150 °C
- Resistant to extreme environmental conditions

Field of application

- Compacting of plastic and concrete
- Assisting the flow of material in silos and hoppers
- Separating of different sized products on sieves

Construction

- Vibration through rotating precision rollers in highly flexible steel guides
- Reinforced by two extra-shockproof bronze end plates

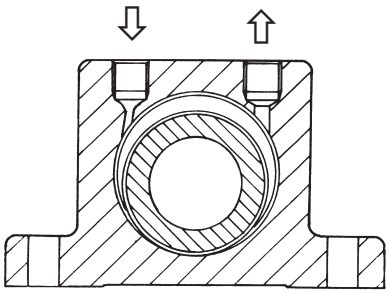

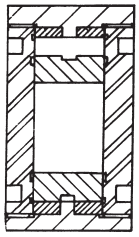

Housing made from extruded aluminium alloy
Highly flexible steel guides
Cast precision steel roller
Special bronze end plates

Technical data (in detail and with PSI, LBS, CF: www.findeva.com)

Model	Vibrations 1000 rpm 2 bars	Vibrations 1000 rpm 6 bars	Centrifugal force N 2 bars	Centrifugal force N 6 bars	Air consumption l/min 2 bars	Air consumption l/min 6 bars
DAR-2	36	38	2200	4090	70	200
DAR-3	27	32	2720	6050	100	300
DAR-4	18	25	2360	6690	120	360
DAR-5	9.5	16.5	1680	7200	130	390
DAR-6	7.8	12	4370	10300	170	470
DAR-7	8	11.5	5870	12000	180	500

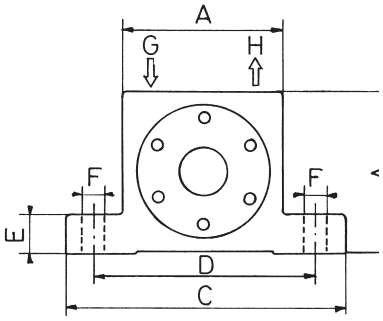

Sizes and weights in mm and g (more details and including inches at www.findeva.com)

Model	A	Width	C	D	E	F	G/H Thread BSP	Weight g
DAR-2	50	30	86	68	12	7	1/8”	370
DAR-3	65	36	113	90	16	9	1/4”	760
DAR-4	80	40	128	102	16	11	1/4”	1270
DAR-5	100	52	160	130	20	13	3/8”	2450
DAR-6	120	62	194	152	24	17	3/8”	4700
DAR-7	120	77	194	152	24	17	3/8”	5700