BD|SENSORS
pressure measurement

LMP 308

Separable Stainless Steel Probe

Stainless Steel Sensor

accuracy according to IEC 60770:
standard: 0.35 % FSO
option: 0.25 % FSO / 0.1 % FSO

Nominal pressure

from 0 ... 1 mH_2O up to 0 ... 250 mH_2O

Output signals

2-wire: 4 ... 20 mA
others on request

Special characteristics

- diameter 35 mm
- cable and probe head separable
- high accuracy
- good long term stability

Optional versions

- IS-version
  Ex ia = intrinsically safe for gas and dust
- SIL 2 (Safety Integrity Level)
- customer specific versions
- mounting accessories e.g.
  mounting flange and terminal clamp
  in stainless steel
- different kinds of cables
  and elastomers

The separable stainless steel probe LMP 308 is designed for the continuous level measurement of water and low-viscosity fluids.

In order to facilitate stock-keeping and maintenance the probe head is plugged to the cable assembly with a connector and can be changed easily.

Preferred areas of use are

Water / filtrated sewage

ground water level measurement

level measurement in wells and open waters

rain spillway basin

level measurement in container

water treatment plants

water recycling

BD SENSORS GmbH
BD-Sensors-Straße 1
D - 95199 Thierstein

Tel.: +49 (0) 92 35 / 98 11- 0
Fax: +49 (0) 92 35 / 98 11- 11

www.bdsensors.de
info@bdsensors.de

Input pressure range														
Nominal pressure gauge	[bar]	0.10	0.16	0.25	0.40	0.60	1	1.6	2.5	4	6	10	16	25
Level	[mH_2O]	1	1.6	2.5	4	6	10	16	25	40	60	100	160	250
Overpressure	[bar]	0.5	1	1	2	5	5	10	10	20	40	40	80	80
Burst pressure	[bar]	1.5	1.5	1.5	3	7.5	7.5	15	15	25	50	50	120	120

Output signal / Supply			
Standard	2-wire:	4 ... 20 mA / V_S = 8 ... 32 V_{DC}	SIL-version: V_S = 14 … 28 V_{DC}
Option IS-protection	2-wire:	4 ... 20 mA / V_S = 10 ... 28 V_{DC}	SIL-version: V_S = 14 … 28 V_{DC}
Performance			
Accuracy [1]	standard:	nominal pressure < 0.4 bar:	≤ ± 0.5 % FSO
		nominal pressure ≥ 0.4 bar:	≤ ± 0.35 % FSO
	option 1:	nominal pressure ≥ 0.4 bar:	≤ ± 0.25 % FSO
	option 2:	for all nominal pressures:	≤ ± 0.1 % FSO
Permissible load	$R_{max} = [(V_S – V_{S\,min}) / 0.02\ A]\ \Omega$		
Influence effects	supply: 0.05 % FSO / 10 V		load:0.05 % FSO / kΩ
Long term stability	≤ ± 0.1 % FSO / year at reference conditions		
Response time	≤ 10 msec		
[1] accuracy according to IEC 60770 – limit point adjustment (non-linearity, hysteresis, repeatability)			
Thermal effects (Offset and Span)			
Nominal pressure P_N	[bar]	< 0.40	≥ 0.40
Tolerance band	[% FSO]	≤ ± 1	≤ ± 0.75
in compensated range	[°C]	0 ... 70	
Permissible temperatures			
Permissible temperatures	medium: -20 ... 70 °C		storage: -25 ... 70 °C
Electrical protection [2]			
Short-circuit protection	permanent		
Reverse polarity protection	no damage, but also no function		
Electromagnetic compatibility	emission and immunity according to EN 61326		
[2] additional external overvoltage protection unit in terminal box KL 1 or KL 2 with atmospheric pressure reference available on request			
Electrical connection			
Cable with sheath material [3]	PVC (-5 … 70 °C) grey Ø 7.4 mm PUR (-20 … 70 °C) black Ø 7.4 mm FEP [4] (-20 … 70 °C) black Ø 7.4 mm		
Bending radius	static installation: 10-fold cable diameter dynamic application: 20-fold cable diameter		
[3] shielded cable with integrated ventilation tube for atmospheric pressure reference *[4] do not use freely suspended probes with an FEP cable if effects due to highly charging processes are expected*			
Materials (media wetted)			
Housing	stainless steel 1.4404 (316L)		
Seals	FKM EPDM others on request		
Diaphragm	stainless steel 1.4435 (316L)		
Protection cap	POM-C		
Cable sheath	PVC, PUR, FEP, others on request		
Explosion protection			
Approvals DX19-LMP 308	IBExU 10 ATEX 1068 X / IECEx IBE 12.0027X zone 0: II 1G Ex ia IIC T4 Ga zone 20: II 1D Ex ia IIIC T 85°C Da		
Safety technical maximum values	U_i = 28 V, I_i = 93 mA, P_i = 660 mW, C_i ≈ 0nF, L_i ≈ 0µH, the supply connections have an inner capacity of max. 27 nF to the housing		
Permissible temperatures for environment	in zone 0: -20 ... 60 °C with p_{atm} 0.8 bar up to 1.1 bar in zone 1 or higher: -20 ... 70 °C		
Connecting cables (by factory)	cable capacitance: signal line/shield also signal line/signal line: 160 pF/m cable inductance: signal line/shield also signal line/signal line: 1 µH/m		
Miscellaneous			
Option SIL2 version [5]	according to IEC 61508 / IEC 61511		
Current consumption	max. 25 mA		
Weight	approx. 250 g (without cable)		
Ingress protection	IP 68		
CE-conformity	EMC Directive: 2014/30/EU		
ATEX Directive	2014/34/EU		
[5] not in combination with the accuracy 0.1 % FSO			

Wiring diagram

2-wire-system (current)

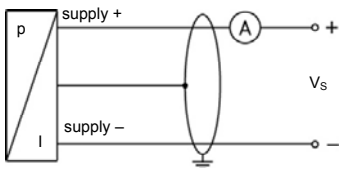

connector

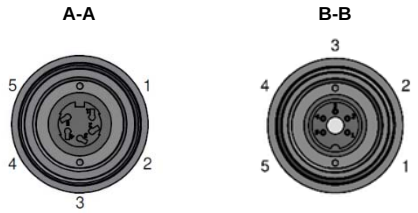

Pin configuration

Electrical connection	Binder series 723 [6] (5-pin)	cable colours (IEC 60757)
Supply + Supply –	3 1	WH (white) BN (brown)
Shield	5	GNYE (green-yellow)

[6] *in separated version*

Dimensions (mm / in)

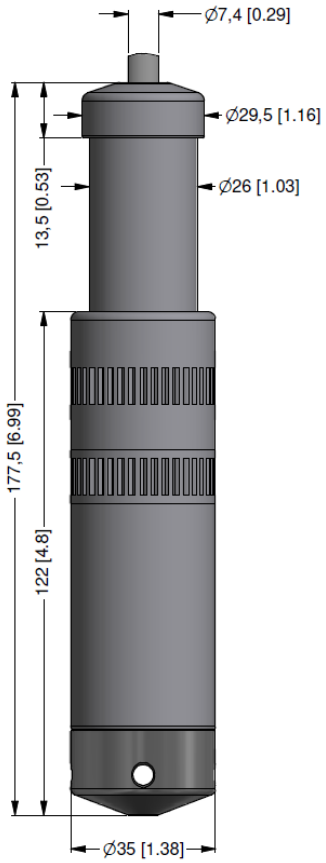

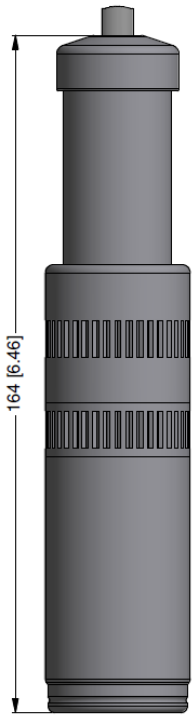

protection cap
removable

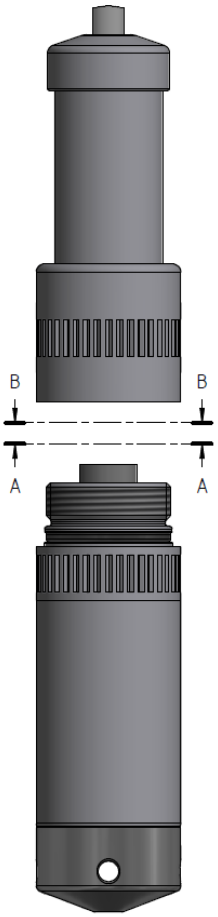

separability of probe head
and cable assembly

Mounting flange with cable gland

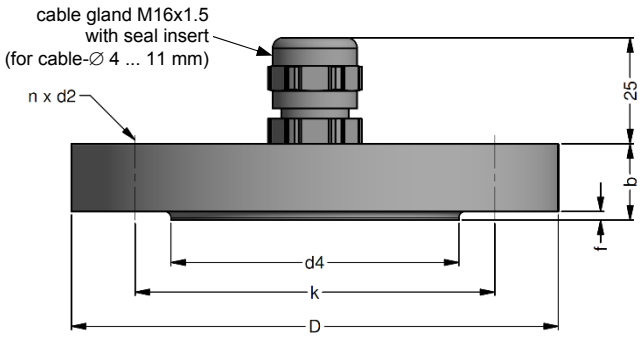

dimensions in mm			
size	DN25 / PN40	DN50 / PN40	DN80 / PN16
b	18	20	20
D	115	165	200
d2	14	18	18
d4	68	102	138
f	2	3	3
k	85	125	160
n	4	4	8

Technical data	
Suitable for	all probes
Flange material	stainless steel 1.4404 (316L)
Material of cable gland	standard: brass, nickel plated on request: stainless steel 1.4305 (303); plastic
Seal insert	material: TPE (ingress protection IP 68)
Hole pattern	according to DIN 2507

Ordering type	**Ordering code**	**Weight**
DN25 / PN40 with cable gland brass, nickel plated	ZMF2540	1.4 kg
DN50 / PN40 with cable gland brass, nickel plated	ZMF5040	3.2 kg
DN80 / PN16 with cable gland brass, nickel plated	ZMF8016	4.8 kg

Terminal clamp

Technical data	
Suitable for	all probes with cable ∅ 5.5 ... 10.5 mm
Material of housing	standard: steel, zinc plated optionally: stainless steel 1.4301 (304)
Material of clamping jaws and positioning clips	PA (fibre-glass reinforced)
Dimensions (mm)	174 x 45 x 32
Hook diameter	20 mm

Ordering type	**Ordering code**	**Weight**
Terminal clamp, steel, zinc plated	Z100528	approx. 160 g
Terminal clamp, stainless steel 1.4301 (304)	Z100527	

Display program

CIT 200 Process display with LED display

CIT 250 Process display with LED display and contacts

CIT 300 Process display with LED display, contacts and analogue output

CIT 350 Process display with LED display, bargraph, contacts and analogue output

CIT 400 Process display with LED display, contacts, analogue output and Ex-approval

CIT 600 Multichannel process display with graphics-capable LC display

CIT 650 Multichannel process display with graphics-capable LC display and datalogger

CIT 700 / CIT 750 Multichannel process display with graphics-capable TFT monitor, touchscreen and contacts

PA 440 Field display with 4-digit LC display

For further information please contact our sales department or visit our homepage: http://www.bdsensors.de

Tel.: +49 (0) 92 35 / 98 11- 0
Fax: +49 (0) 92 35 / 98 11- 11

www.bdsensors.de
info@bdsensors.de

BD|SENSORS pressure measurement

Ordering code LMP 308

LMP 308 ☐☐☐-☐☐☐☐-☐-☐-☐-☐-☐-☐-☐-☐☐☐-☐☐☐

Pressure																						
		in bar	4	4	0																	
		in mH_2O	4	4	1																	
Input	**[mH_2O]**	**[bar]**																				
	1.0	0.10				1	0	0	0													
	1.6	0.16				1	6	0	0													
	2.5	0.25				2	5	0	0													
	4.0	0.40				4	0	0	0													
	6.0	0.60				6	0	0	0													
	10	1.0				1	0	0	1													
	16	1.6				1	6	0	1													
	25	2.5				2	5	0	1													
	40	4.0				4	0	0	1													
	60	6.0				6	0	0	1													
	100	10				1	0	0	2													
	160	16				1	6	0	2													
	250	25				2	5	0	2													
		customer				9	9	9	9													consult
Housing																						
		stainless steel 1.4404 (316L)								1												
		customer								9												consult
Diaphragm																						
		stainless steel 1.4435 (316L)									1											
		customer									9											consult
Output																						
		4 … 20 mA / 2-wire										1										
		intrinsic safety 4 … 20 mA / 2-wire										E										
		SIL2 4 … 20 mA / 2-wire										1S										
		SIL2 with intrinsic safety 4 … 20 mA / 2-wire										ES										
		customer										9										consult
Seals																						
		FKM											1									
		EPDM											3									
		customer											9									consult
Electrical connection																						
		PVC-cable (grey, Ø 7.4 mm) [1]												1								
		PUR-cable (black, Ø 7.4 mm) [1]												2								
		FEP-cable (black, Ø 7.4 mm) [1]												3								
		customer												9								consult
Accuracy																						
	standard for $p_N \geq 0.4$ bar	0.35 % FSO													3							
	standard for $p_N < 0.4$ bar	0.5 % FSO													5							
	option 1 for $p_N \geq 0.4$ bar	0.25 % FSO													2							
	option 2	0.1 % FSO [2]													1							
		customer													9							consult
Cable length																						
		in m														9	9	9				
Version																						
		standard																	0	0	0	
		customer																	9	9	9	consult

[1] cable with integrated ventilation tube for atmospheric pressure reference

[2] not in combination with SIL

01.04.2020

BD|SENSORS GmbH
BD-Sensors-Straße 1
D - 95199 Thierstein

Tel.: +49 (0) 92 35 / 98 11- 0
Fax: +49 (0) 92 35 / 98 11- 11

www.bdsensors.de
info@bdsensors.de