BOOSTER

CHEM

EXTRU

PURO

POLY

EXTRU II b

Extrusion gear pump

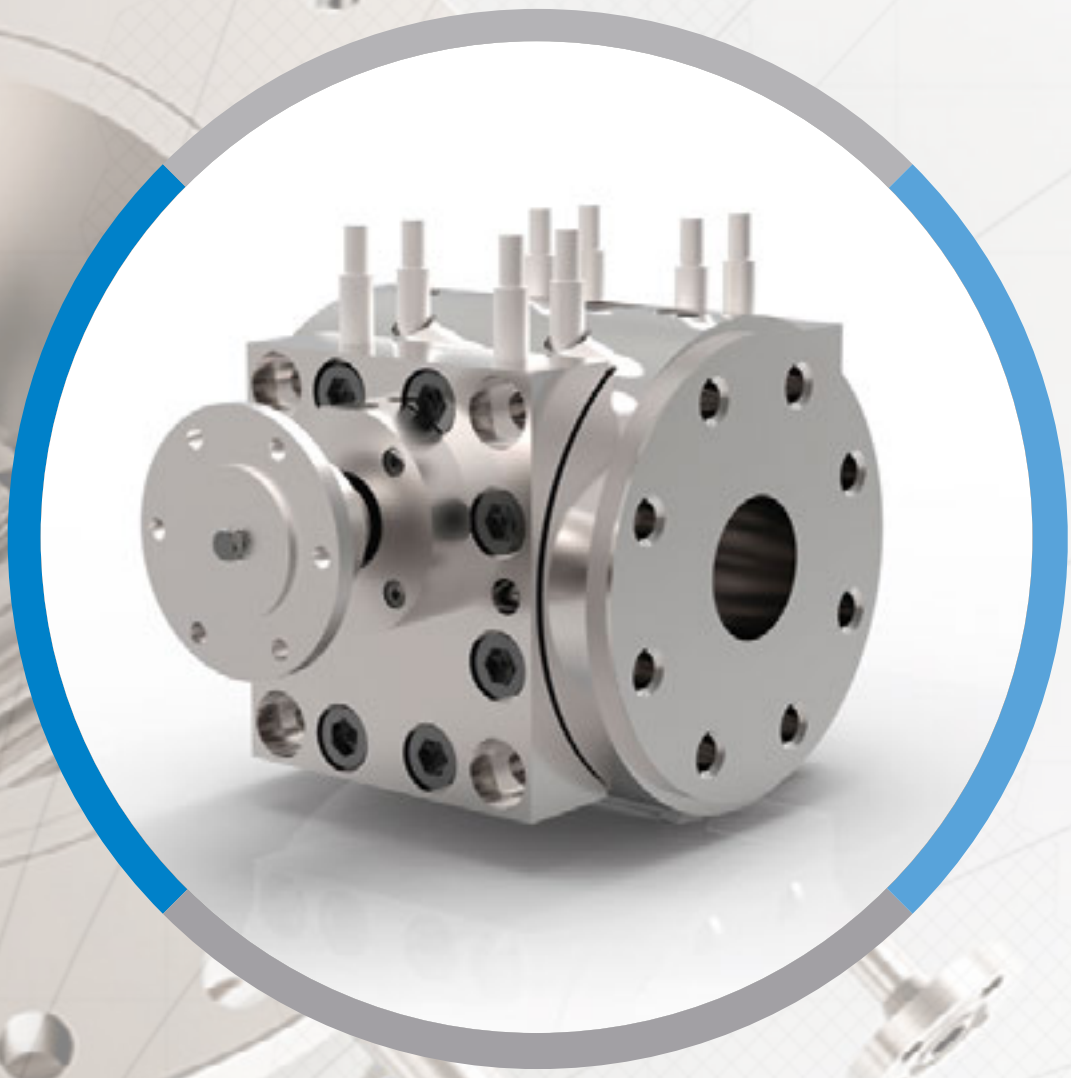

WITTE PUMPS & TECHNOLOGY

EXTRU II b

The EXTRU is mainly used in conjunction with extruders or kneaders. It reduces the natural pulsation and irregular conveyance, particularly in single-screw extruders. The pressure build up in the gear pump is more efficient in comparison to the extruder. Because of this, less energy or heat is transferred into the polymer and the product is conveyed in a more gentle manner.

The EXTRU is essential for precision films extrusion or micro granulate pelletizing. The EXTRU is an essential component of modern extrusion lines, its robust design minimizes down times of production lines.

The WITTE - quick color change version lends itself particularly to master batch applications with frequent changes of color. In order to prevent the pump‘s drive shaft from being driven/pushed out of the housing when the suction pressure exceeds 10 bar (extruder conveying pressure), the drive shaft must be pressurewise relieved. It protrudes from both sides of the housing and is sealed, so that atmospheric pressure predominates on both sides of the drive shaft.

Technical Features

Housing:	Heat resistant carbon steel, e.g. 1.6582 (4340), stainless steel e.g. 1.4313 (E415), optional: surface coating
Gears :	Tool steel, nitrided steel, special steel, optional: surface coating, helical gearing, herringbone gearing (for extremely low-pulsation conveyance)
Friction Bearings:	Tool steel, Al-bronze, NiAg (nickel-silver), special materials, optional: surface coating
Shaft Seal:	Viscoseal, stuffing box
Heating Systems:	Electrically, by means of heating cartridges, optional: cover heating

Application Examples

Polymers:	PS, PET, PVC, PC, PA, PMMA, HDPE, LDPE, LLDPE, PP, Polysulfone, PEEK
Foodstuffs:	Liquorice, chewing gum

Seals

Pump Sizes

From 22/13 (2,78 cm^3/rev) up to 280/280 (12.000 cm^3/rev). Intermediate sizes, with narrower gear wheels for higher differential pressure, are possible, e.g. 140/90 (690 cm^3/rev)

Operating Parameters

Viscosity:	Up to 40.000 Pas
Temperature:	Up to 400 °C (752 °F)
Suction Pressure:	Up to max. 120 bar (1.740 psig)
Differential Pressure:	Up to 250 bar (3.626 psig), special models also available for higher differential pressures

The values listed are maximum values and must not coincide under certain circumstances.

Seals

Viscoseal (VS)

The viscoseal is the standard seal for WITTE EXTRU- and BOOSTER- pumps. This is a dynamic seal for high viscosities and suction pressures. It can be provided with heating or cooling. The dynamic seal is suitable for high pressures and temperatures. Its range of use is limited by the suction pressure and the viscosity of the medium being conveyed (at least 50 Pas). The viscosity can be increased by an additional cooling system if necessary.

Viscosity:	**Temperature:**
50 to 40.000 Pas	max. 350 °C (662 °F)

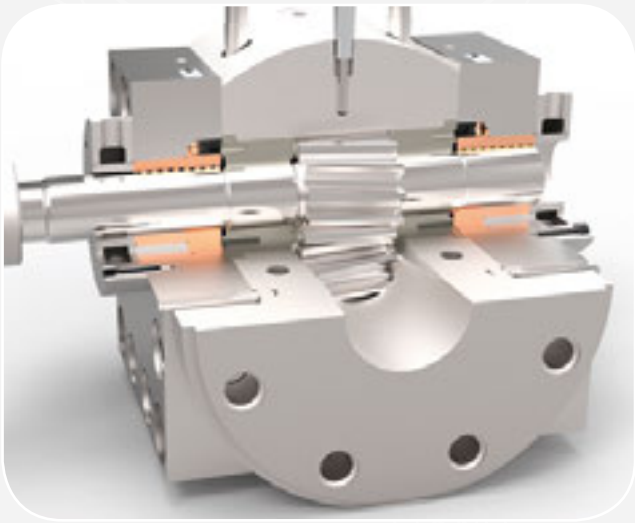

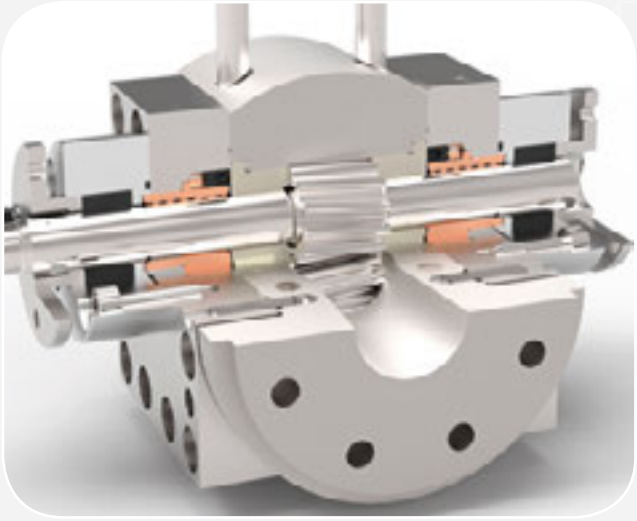

Stuffing Box

The stuffing box can be used as an additional seal for the viscoseal. The stuffing box is a simple (static) seal for WITTE gear pumps. It can be provided with buffering if so desired. The range of application is similar to that of the viscoseal. The standard material used for the packing is made of expanded pure graphite with structural textile fibers. But it goes without saying, that other materials are also available.

Viscosity (stuffing box)**:**	**Temperature:**
max. 10.000 Pas	max. 350 °C (662 °F)

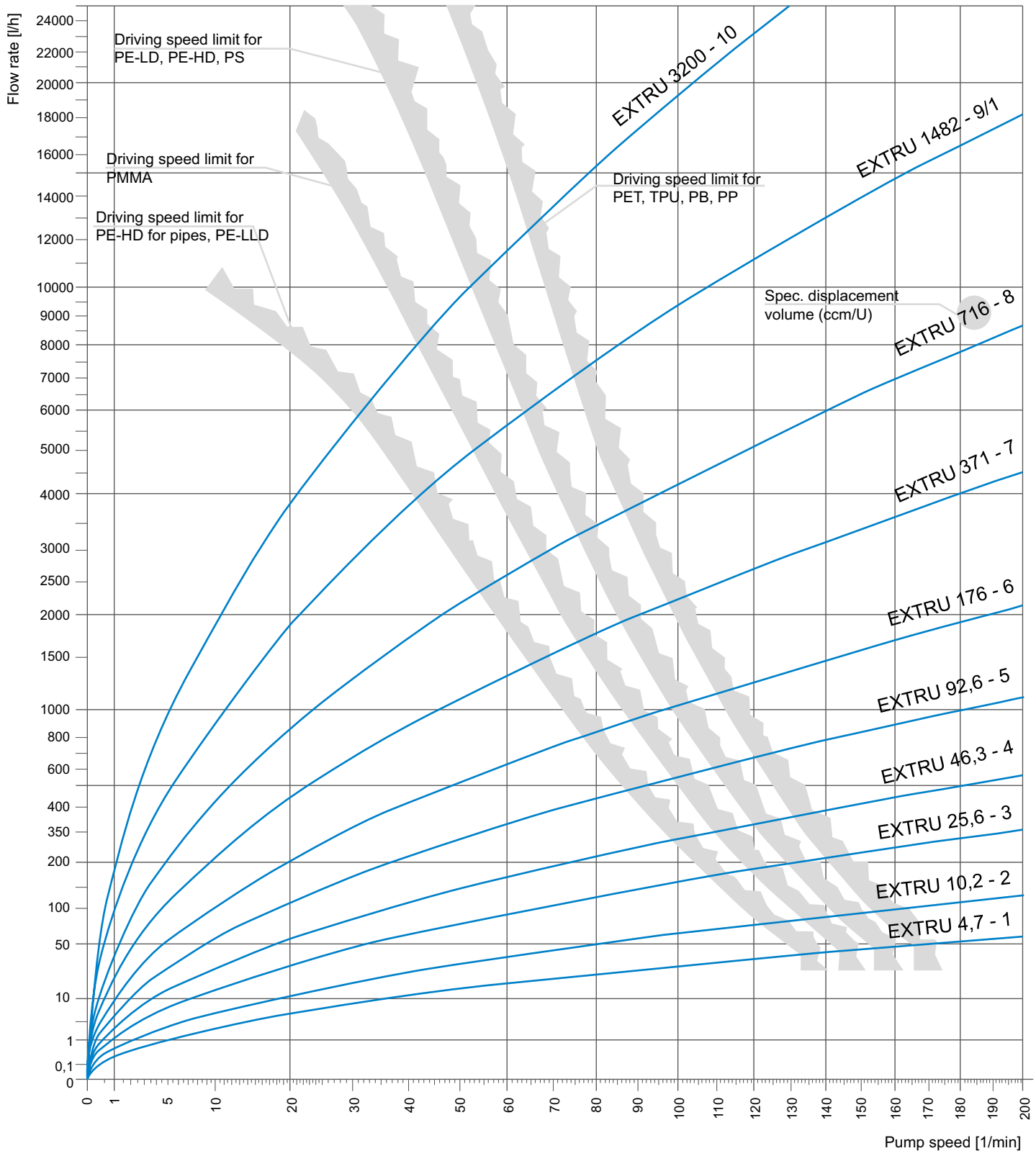
Flow rate [l/h]
24000
22000
20000
18000
16000
14000
12000
10000
9000
8000
7000
6000
5000
4000
3000
2500
2000
1500
1000
800
600
400
350
200
100
50
10
1
0,1
0
Driving speed limit for PE-LD, PE-HD, PS
Driving speed limit for PMMA
Driving speed limit for PE-HD for pipes, PE-LLD
Driving speed limit for PET, TPU, PB, PP
Spec. displacement volume (ccm/U)
EXTRU 3200 - 10
EXTRU 1482 - 9/1
EXTRU 716 - 8
EXTRU 371 - 7
EXTRU 176 - 6
EXTRU 92,6 - 5
EXTRU 46,3 - 4
EXTRU 25,6 - 3
EXTRU 10,2 - 2
EXTRU 4,7 - 1
0
1
5
10
20
30
40
50
60
70
80
90
100
110
120
130
140
150
160
170
180
190
200
Pump speed [1/min]

Size / Capacity / Displacement Volume

Application Examples

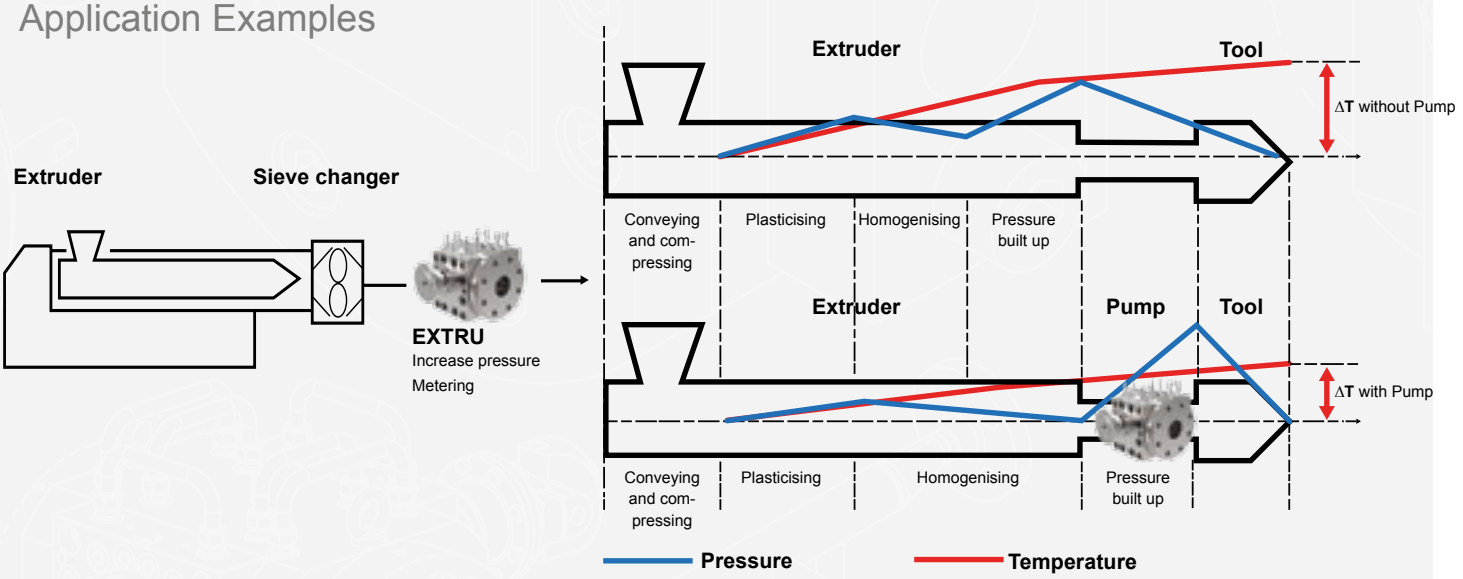

Pump Sizes

Size		Spec. displace-ment volume (cm^3/rev)	Capacity (l/h)*
1	(22/22)	4,7	3-56
2	(28/28)	10,2	6-92
3	(36/36)	25,6	15-230
4	(45/45)	46,3	28-417
5	(56/56)	92,6	55-722
6	(70/70)	176	105 - 1370
7	(90/90)	371	222 - 2890
8	(110/110)	716	430 - 4700
9	(140/140)	1.482	900 - 8850
10	(180/180)	3.200	1920 - 17000
11	(224/224)	6.100	3660 - 32000
12	(280/280)	12.000	6590 - 58000

* (Depending on the fluid characteristics and operating conditions)

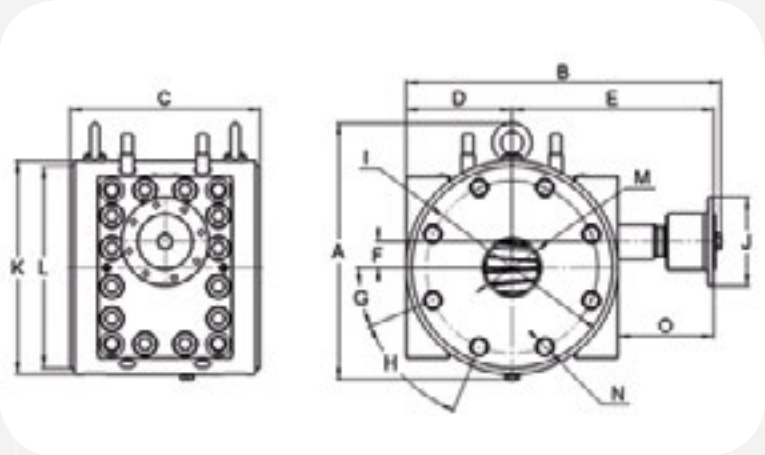

EXTRU-Dimensions

Pump size	A	B	C	D	E	F	G	H	I	J	K	L	M	N	O	Weight
1 (22/22)	99.6	142.1	100	48	90	11	22.5	8x45	66	58	92	84	28	8xM8	40,5	6 Kg
2 (28/28)	134.9	173	135	59	109	14	22.5	8x45	90	65	116	108	32	8xM10	50	15 Kg
3 (36/36)	185.9	215	150	76	134	18	22.5	8x45	110	75	145	136	42	8xM12	58	20 Kg
4 (45/45)	235.9	316.7	204	104.5	203.5	22.5	22.5	8x45	750	90	195	185	55	8xM16	99	50 Kg
5 (56/56)	281.5	368	230	120	239	28	22.5	8x45	185	100	230	218	68	8xM20	119	80 Kg
6 (70/70)	350.4	430.8	260	145	276	35	22.5	8x45	235	120	290	275	80	8xM24	131	150 Kg
7 (90/90)	430.4	505.3	335	181	312	45	15	12x30	300	150	362	346	100	12xM24	147	280 Kg
8 (110/110)	495.9	563	420	215	335	55	15	12x30	340	180	430	400	125	12xM30	120	500 Kg
9 (140/140)	620	800	550	300	485	70	15	12x30	390	225	550	530	150	12xM39	235	1000 Kg
10 (180/180)	817	1040	680	418	617	90	11.25	16x22.5	440	250	700	680	200	16xM39	297	1830 Kg

WITTE WORLDWIDE

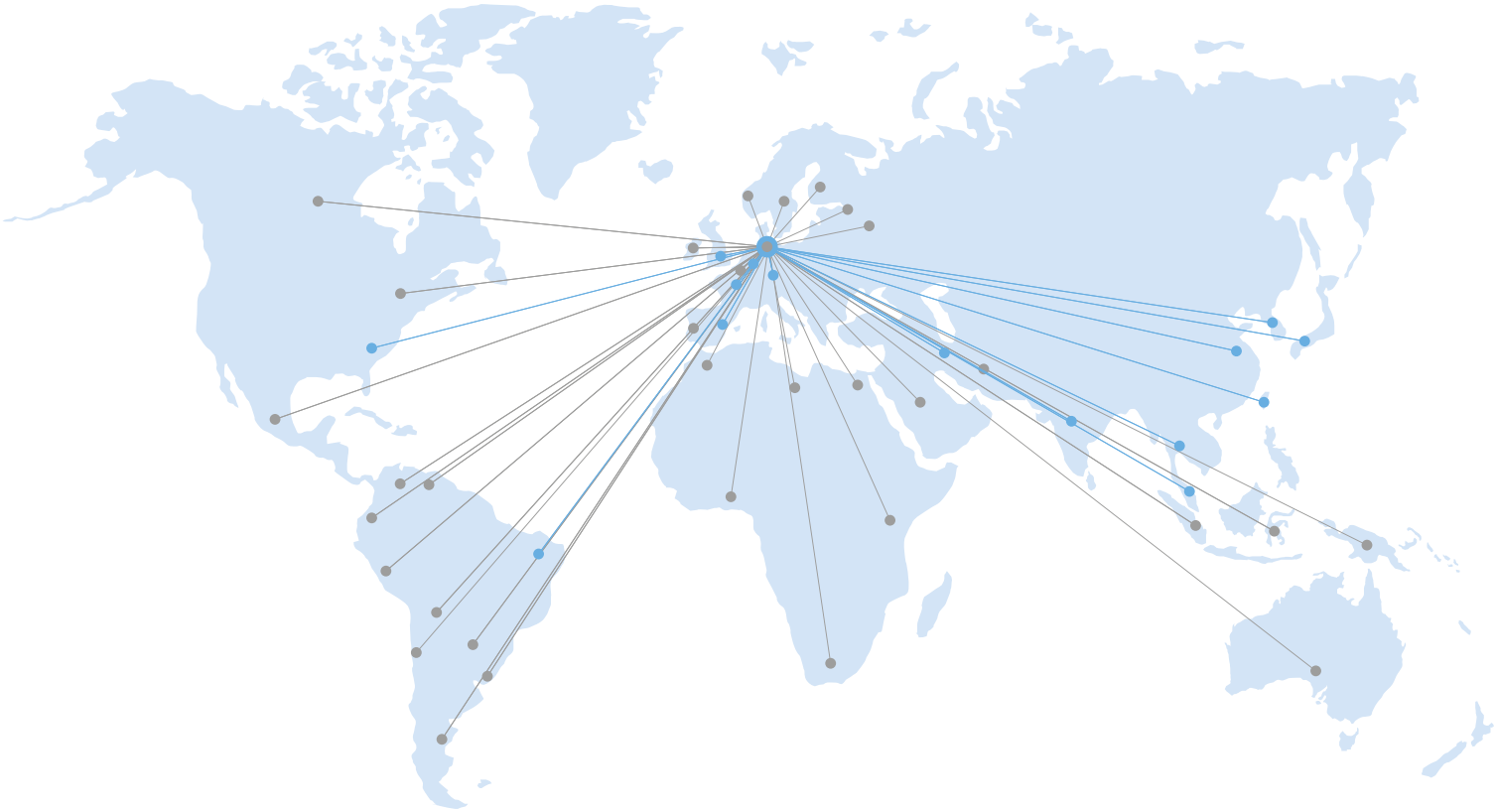

WITTE PUMPS & TECHNOLOGY GmbH
Lise-Meitner-Allee 20
D-25436 Tornesch / Hamburg / Germany

T: +49 (0) 4120 70659-0
F: +49 (0) 4120 70659-49
info@witte-pumps.com
www.witte-pumps.com

WITTE PUMPS & TECHNOLOGY

05/2014 EXTRU II ENG REV1.1