Locating Components with ball end, Style A

Item description/product images

METRIC Parts

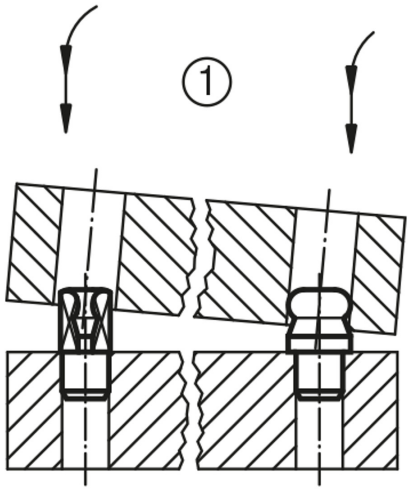

Description

Material:
Tool steel or stainless steel 1.4305.

Version:
Steel hardened and ground.
Stainless steel ground and kolsterized.

Note:
Ball end locating pins are specially designed to ease the locating process. The tendency to jam, caused by the locating hole not being at right angles to the pin or by the pushing force not being parallel to the pin axis, is minimized by the ball-end form (See illustration 1 for K0351 Style B)

Drawings

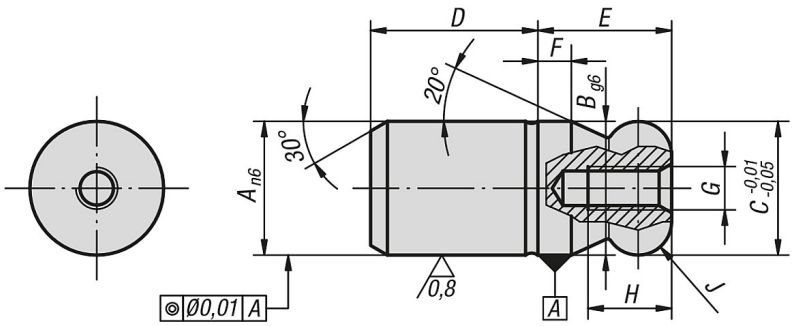

Locating Components with ball end Style A, metric

Item No. Tool steel	Item No. Stainless steel	A	B	C	D	E	F	G	H	J
K0350.08	**K0350.508**	8	8	8	10	8	2	M3	6	R 2
K0350.10	**K0350.510**	10	10	10	13	10	2,5	M3	6	R 2,5
K0350.12	**K0350.512**	12	12	12	15	12	3	M4	8	R 3
K0350.16	**K0350.516**	16	16	16	20	16	4	M5	10	R 4
K0350.20	**K0350.520**	20	20	20	25	20	5	M5	10	R 5
K0350.25	-	25	25	25	25	25	6	M5	10	R 6
K0350.30	-	30	30	30	30	30	8	M6	12	R 8

© KIPP Inc.

Locating Components with ball end, Style A

Item No. Tool steel	Item No. Stainless steel	A	B	C	D	E	F	G	H	J
K0350.40	-	40	40	40	40	40	10	M6	12	R 10
K0350.50	-	50	50	50	50	50	12	M6	12	R 12

© KIPP Inc.