# Pin Retaining Cables with eye

## Item description/product images

METRIC Parts

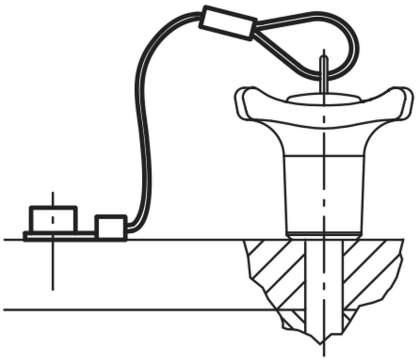

## Description

**Material:**
Retaining cable in stainless steel.
Clip and eye in aluminum.

**Version:**
Cable plastic coated.

**Note:**
With the Retaining Cable and Pin Ring (K0367) the Ball Lock Pins (K0363, K0364, K0366, K0642 and K0790) can be secured so that they cannot be lost. A screw M5 is used to secure the retaining cable.
Application temperature: +80 °C.

## Drawings

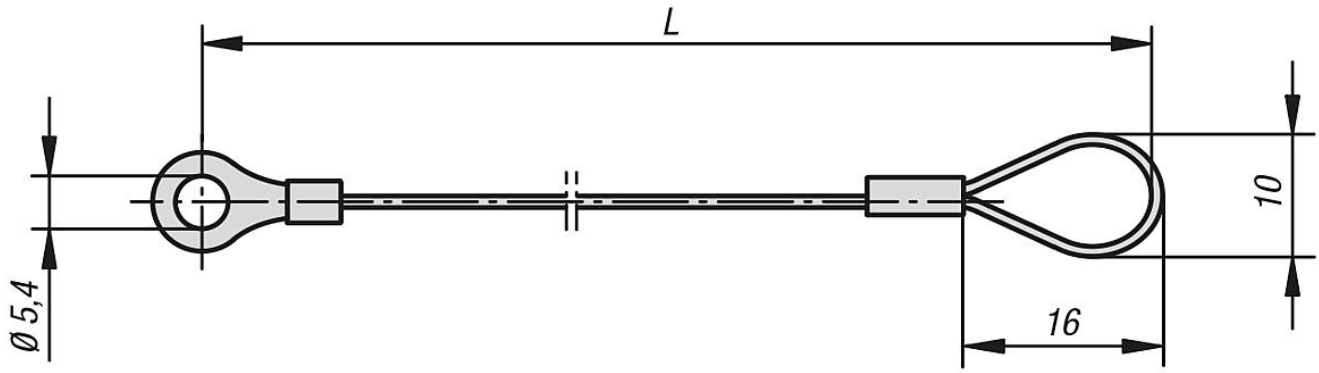


## Pin Retaining Cables with eye, metric

# Pin Retaining Cables with eye

| Item No. | L |
|---|---|
| **K0367.0150** | 150 |
| **K0367.0200** | 200 |
| **K0367.0300** | 300 |

© KIPP Inc.