CARLOR ENGINEERING

History

Carlor Engineering, ISO 9001 certified Belgian manufacturer, it is 15 years experience in the development of electric coolant heaters for all types of water-cooled engines. Carlor Engineering quickly became the leader in this field with the assets of a small company: reactivity, adaptation to market demand, quality and reliability.

TopStart (Bio)diesel & Oil

(Bio)diesel & Oil preheater with circulation pump

The TopSart (Bio)diesel & Oil is an electrical preheating system with forced circulation made to warm up the (bio)diesel or oil of the engine.
It is universal, reliable, easy-to-install and maintenance-free. The system has also following advantages: fuel savings, decreasing pollution, reduced engine wear, no more difficult cold starts.

Product benefits

- Heavy machined aluminium body 100% recyclable
- Very compact product with integrated circulating pump for quick and homogeneous preheating
- Integrated powerful circulating pump saving electricity and improving the life cycle of engine components
- Heating element with top-quality shielding and low specific power, increasing its life-cycle and that of the coolant
- Control thermostat with high cutout power for an optimized life cycle
- Safety thermostat with manual re-set option to protect the heating element if (bio)diesel or oil levels in the circuit are low or if the control thermostat fails
- High waterproofness
- Easy replacement of parts
- Two years warranty on labour and spare parts

TopStart (Bio)diesel & Oil

(Bio)diesel & Oil preheater with circulation pump

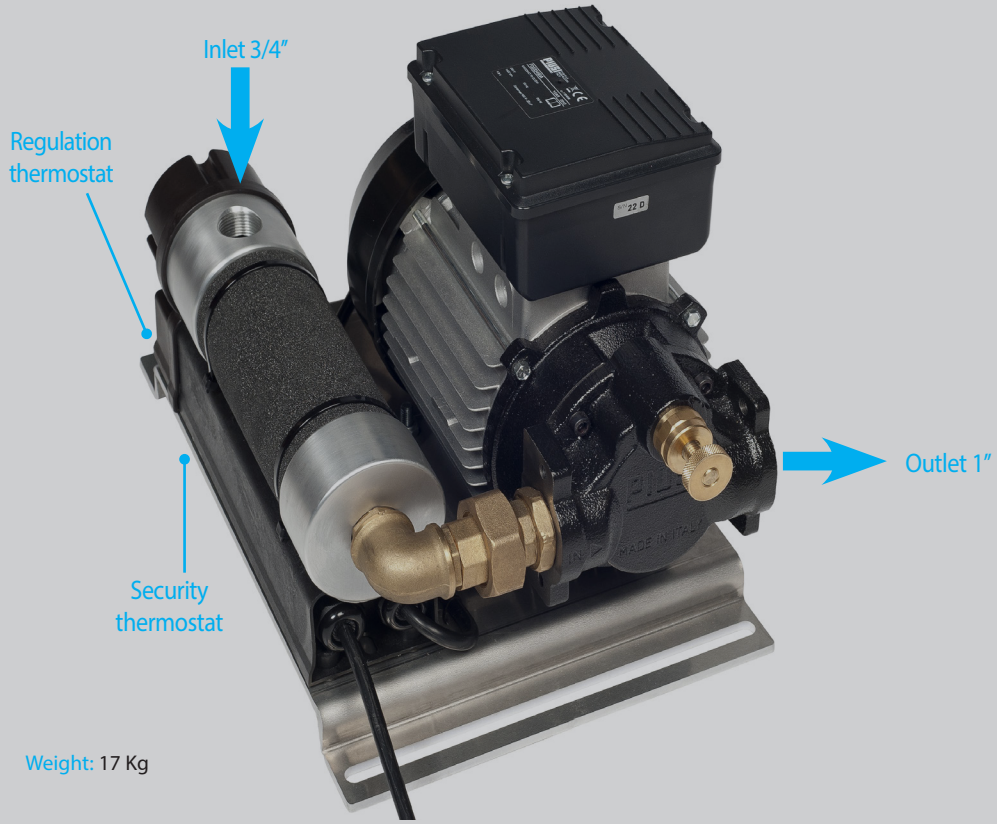

Weight: 17 Kg

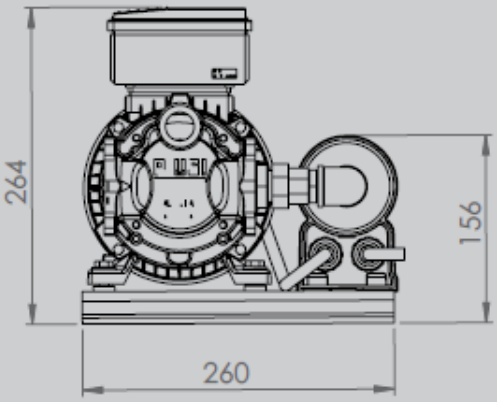

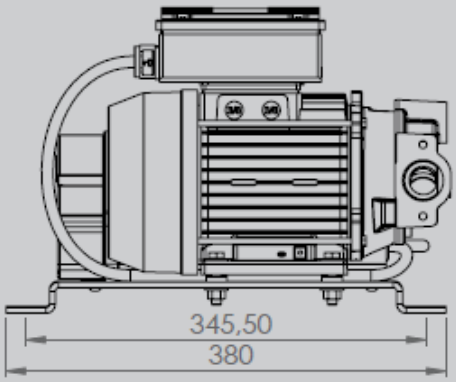

Technical characteristics

HEATING UNIT
- Machined aluminium AlMgSi1 heating unit
- PA66 protection covers
- 1" Inlet and 3/4" outlet

CIRCULATING PUMP
- Electric vane pump: 750W
- Voltage: 230V
- Frequency: 50Hz or 60Hz
- Flow: 25L/min at 6 bar

WATER TEMPERATURE CONTROL THERMOSTAT
- Adjustable control thermostat with 25A cutout rating, 100,000 cycles
- Available temperature interval: 0°C - 40°C (32°F - 104°F)
  0°C - 80°C (32°F- 176°F)

SAFETY THERMOSTAT
- Safety thermostat with manual re-set option and 25A cutout rating, 6,000 cycles (60°C / 140°F or 110°C / 230°F)

HEATING ELEMENT
- Incoloy 800 ® shielded immersion heater with very low specific power (2.5 W/cm² - 0.39 W/sq in)
- Power: 1kW
- Voltage: 230V

Carlor Engineering S.A. se réserve le droit de modifier les spécifications techniqué

Rue du Roua 70 | B-4140 SPRIMONT - Belgique
Tel: +32 (0)4 384 01 97 | Fax: +32 (0)4 367 16 66 | info@carlor.com