LEVETTE
CAMS • ZUNGE • CAMES

QUOTA "X" - MEASUREMENT "X" DAS MASS "X" - DIMENSION "X"	LEVA - CAM - ZUNGE - CAME PART #	
mm	TYPE P	TYPE F
16	-	2078ZB
18	627	2074ZB
20	628	2075ZB
22	629	2079ZB
24	-	2080ZB
25	622	-
26	-	2081ZB
28	-	2082ZB
30	630	2083ZB
32	-	2084ZB
34	-	2085ZB
36	-	2086ZB
38	-	2087ZB
40	-	2088ZB
42	-	2089ZB
44	-	2090ZB
46	-	2091ZB
48	-	2092ZB
50	-	2093ZB
52	-	2094ZB
64	-	2096ZB

LEVA TIPO P

CAM TYPE P

ZUNGE TYP P

CAME TYPE P

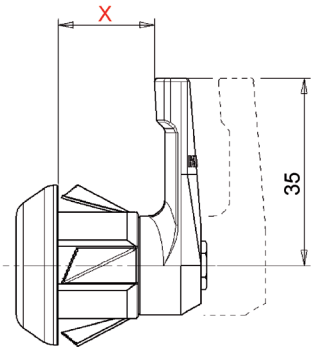

LEVA TIPO F

CAM TYPE F

ZUNGE TYP F
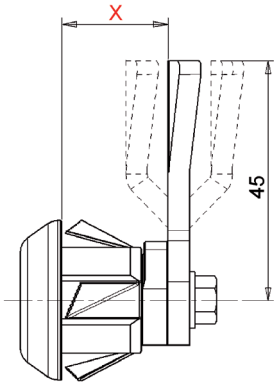
CAME TYPE F