Horizontal Toggle Clamps with Safety Interlock with flat foot and adjustable clamping spindle, stainless steel

Item description/product images

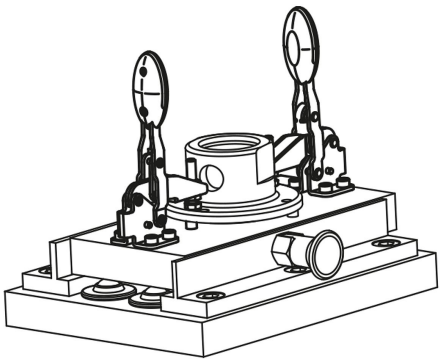

Description

Material:
Stainless steel.
Grip polyamide.
Unlocking bracket TPE.

Version:
Natural finish.

Note:
Maintenance-free, high-quality swivel bushings. Consistently constant use of force when opening and closing. Optimum stability is achieved through the conical clamping arm with U-profile. Including internal bar lock with automatic safety catch.

Accessory:
K0106
K0384
K0390
K0392
K0667

Drawings

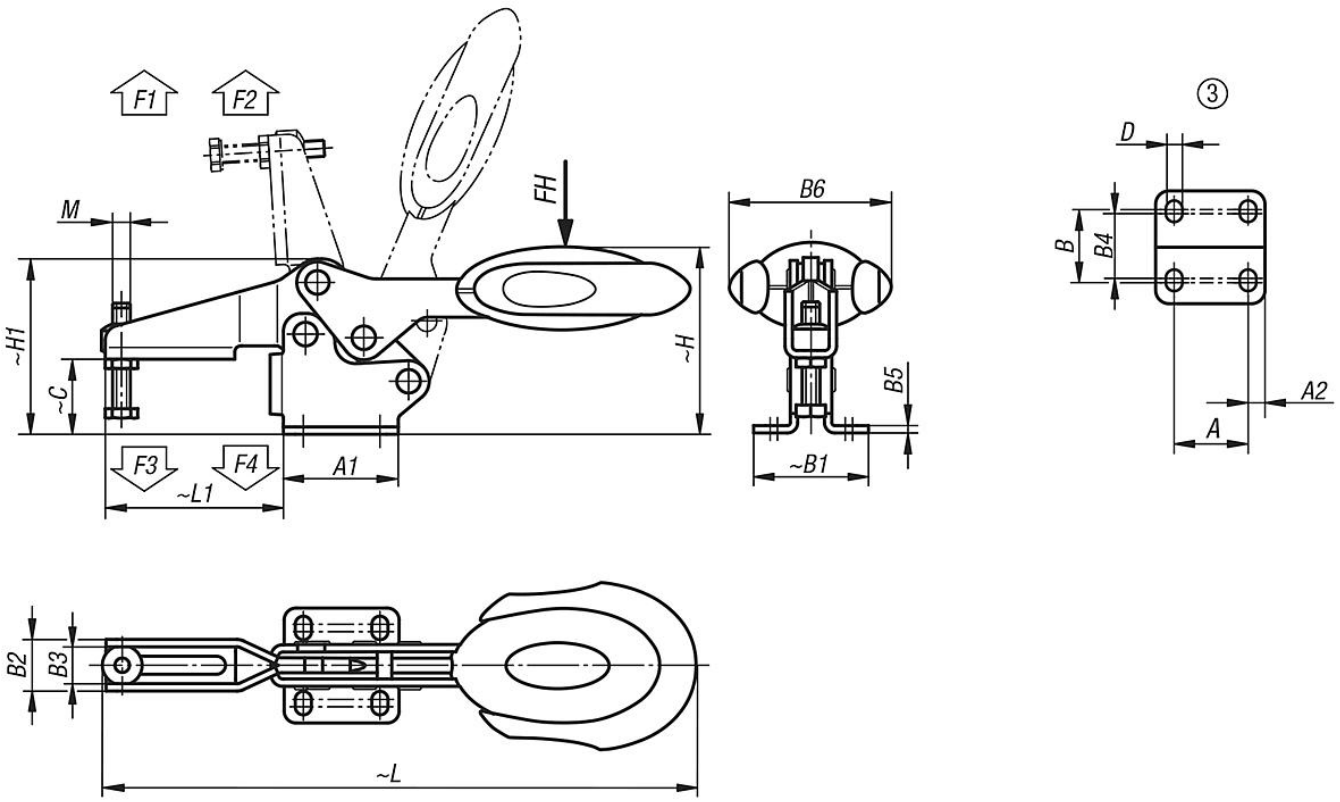

Horizontal Toggle Clamps with Safety Interlock with flat foot and adjustable clamping spindle, stainless steel

Item No.	hole arrangement	Opening angle of holding arm	Opening angle of handle	Hand force FH N	Retaining force F1 N	Holding force F2 N	Clamping force F3 N	Clamping force F4 N
K0660.106101	3	86°	67°	160	1350	1900	720	1200
K0660.108101	3	86°	67°	200	2000	2800	830	1400

Item No.	M	A	A1	A2	B	B1	B2	B3	B4	B5	B6	C	D	H	H1	L	L1
K0660.106101	M6x35	26	39	6,5	28	39	17,5	12,5	23	2,5	53,4	25,4	5,5	63,7	59,6	193,3	60,5
K0660.108101	M8x45	26	44	9	31	45	21	16	24	2,5	51,1	32,2	6,2	73,9	70,1	230,4	74,9

© KIPP Inc.