USER'S MANUAL
Rev. 03/2010

REVO S 1PH

SOLID-STATE RELAY

FROM 30 TO 40A

00004

CD Automation S.r.l.
Via Picasso 34/36 - 20025 – Legnano (MI) – ITALY
Tel +39 0331 577479 – Fax +39 0331 579479
E-Mail: info@cdautomation.com - WEB: www.cdautomation.com

CD Automation s.r.l.
Controllers, Drives & Automation
Via Picasso, 34/36 - 20025 Legnano (MI)- Italia
P.I. 08925720156 -Tel. (0331) 577479 - Fax (0331) 579479
Internet : www.cdautomation.com - E-MAIL: info@cdautomation.com

Dichiarazione di Conformità CE
CE Declaration of Conformity

PRODUTTORE:
PRODUCT MANUFACTURER: CD Automation S.R.L.

INDIRIZZO:
ADDRESS: Via Pablo Picasso 34//36
20025 Legnano (Mi)
Italia

Dichiara che il prodotto:
Declare that the product:

RevoS, 1ph da 30 a 40A

SODDISFA I REQUISITI DELLA NORMA :

Specifica di sicurezza	EN60947-1 :2008
	EN60947-4-3:2001
Specifica sulle emissioni	EN60947-4-3:2000
Specifica sulle Immunità	EN60947-4-3:2000

FULFILS THE REQUIREMENTS OF THE STANDARD:

Electrical safety Standard	EN60947-1 :2008
	EN60947-4-3:2001
Generic Emission standard	EN60947-4-3:2000
Generic Immunity standard	EN60947-4-3:2000

CDAutomation dichiara che I prodotti sopra menzionati sono conformi alla direttiva

CDAutomation declares that The products above mentioned they am conforming to the directive

EMC 2004/108/CEE e alla direttiva Bassa Tensione (low Voltage) **2006/95/CEE**

DESCIZIONE DEL PRODOTTO: Unità di controllo potenza elettrica
PRODUCT DESCRIPTION: Elettric power controll

UTILIZZO: Controllo processi termici
SCOPE OF APPLICATION: Thermal controll process

Data di emissione: 20/04/2010
Issued on: 20/04/2010

Amministratore Unico e
Legale Rappresentante
Claudio Brizzi

Important warning for safety

The Thyristor unit are integral part of industrial equipments.
When it is supply, the Thyristor unit is subject to dangerous tensions. Don't remove the plastic cover.
Don't use this unit in aerospace and nuclear application.

Electric Shock Hazard (Rischi di scosse elettriche, Risque de choque électrique)
When thyristor unit has been connected to main supply voltage and is switched off, before to touch it be secure that the unit is isolated and wait at least one minute to allow discharging internal capacitors.
Thus be secure that:

- access to thyristor unit is only permitted to specialised personnel;
- the authorised personnel must read this manual before to have access to the unit;
- the access to the unit must be denied to unauthorised personnel.

Important warnings (Avvertenze importanti, attention)
During the operations with units under tension, local regulations regarding electrical installation should be rigidly observed:

- Respect the internal safety rules.
- Don't bend components to maintain insulation distances.
- Protect the units from high temperature humidity and vibrations.
- Don't touch components to prevent electrostatic discharges on them.
- Verify that the size is in line with real needs.
- To measure voltage current etc. on unit, remove rings and other jewels from fingers and hands.
- Authorized personnel that work on thyristor unit under power supply voltage must be on insulated board

This listing does not represent a complete enumeration of all necessary safety cautions

Protection (Protezione, Protection)
The unit have IP20 protection rating as defined by the specific international. Is necessary consider the place of installation.

Earth (Messa a terra, Terre)
For safety, the Thyristor unit with isolated heat-sink must be connected to earth.
Earth impedance should be correspondent to local earth regulation. Periodically the earth efficiency should be inspected.

Electromagnetic compatibility (Compatibilità elettromagnetica, Compatibilité électromag.)
Our thyristor units have an excellent immunity to electromagnetic interferences if all suggestions contained in this manual are respected. In respect to a good Engineering practice, all inductive loads like solenoids contactor coils should have a filter in parallel

Emissions (Emissioni, Emission)
All solid-state power controllers emit a certain amount of radio-frequency energy because of the fast switching of the power devices. The CD Automation's Thyristor unit are in accord with the EMC norms, CE mark.
In most installations, near by electronic systems will experience no difficulty with interference. If very sensitive electronic measuring equipment or low-frequency radio receivers are to be used near the unit, some special precautions may be required. These may include the installation of a line supply filter and the use of screened (shielded) output cable to the load.

CE

Basic Connections

Single phase wiring with resistive load

$$I = \frac{P}{V}$$

V = Nominal voltage of the load
I = Nominal current of the load
P = Nominal power of the load

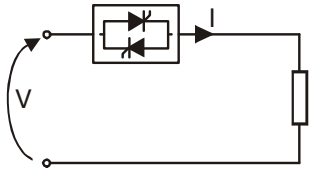

Open Delta wiring with resistive load

$$I = \frac{P}{3V}$$

V = Nominal voltage of the load
I = Nominal current of the load
P = Nominal power of the load

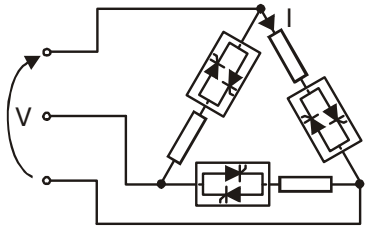

Order Code

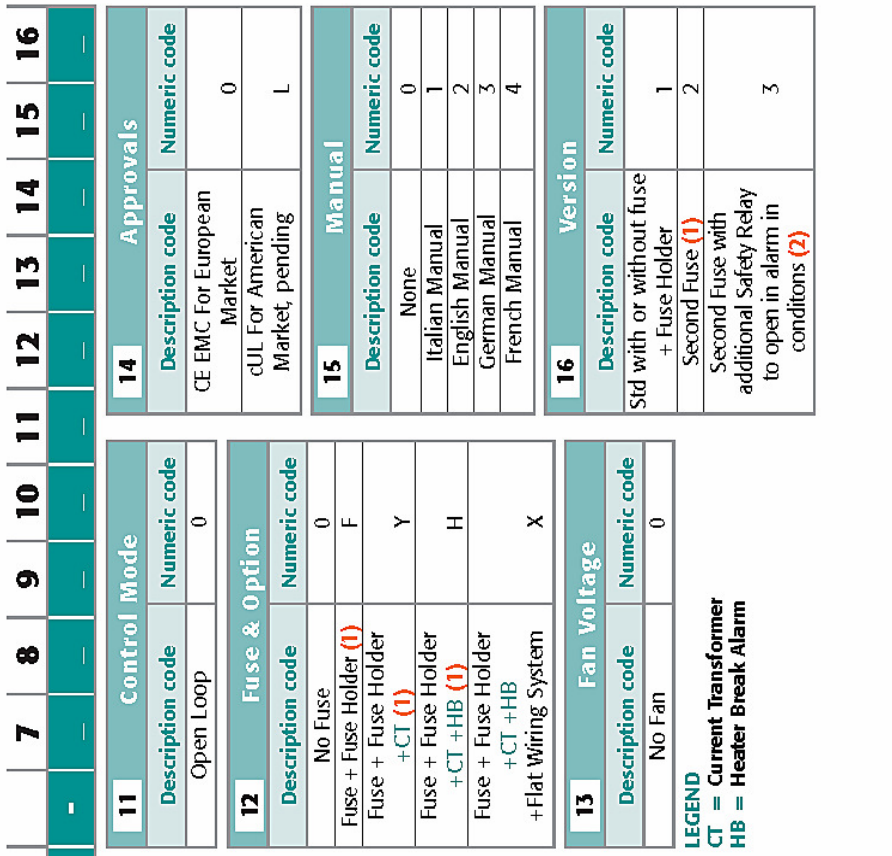

1	2	3	4	5	6		7	8	9	10	11	12	13	14	15	16
REVOS 1PH	R	S	1	–	–	–	-	–	–	–	–	–	–	–	–	–

4, 5, 6 Current

Description code	Numeric code
30A	0 3 0
35A	0 3 5
40A	0 4 0

7 Max Voltage

Description code	Numeric code
480V	4
600V	6

8 Aux. Voltage supply

Description code	Numeric code
No Aux. Voltage, without HB and/or without Analog Input	0
12:24V ac-dc 70mA, with HB and/or Analog Input	4

9 Input

Description code	Numeric code
SSR	S
0:10V dc	V
4:20mA	A

10 Firing

Description code	Numeric code
Zero Crossing ZC	Z
Burst Firing 4 Cycles On at 50% Power Demand	4 (3)
Burst Firing 8 Cycles On at 50% Power Demand	8 (3)
Burst Firing 16 Cycles On at 50% Power Demand	6 (3)

11 Control Mode

Description code	Numeric code
Open Loop	0

12 Fuse & Option

Description code	Numeric code
No Fuse	0
Fuse + Fuse Holder (1)	F
Fuse + Fuse Holder +CT (1)	Y
Fuse + Fuse Holder +CT +HB (1)	H
Fuse + Fuse Holder +CT +HB +Flat Wiring System	X

13 Fan Voltage

Description code	Numeric code
No Fan	0

LEGEND
CT = Current Transformer
HB = Heater Break Alarm

14 Approvals

Description code	Numeric code
CE EMC For European Market	0
cUL For American Market, pending	L

15 Manual

Description code	Numeric code
None	0
Italian Manual	1
English Manual	2
German Manual	3
French Manual	4

16 Version

Description code	Numeric code
Std with or without fuse + Fuse Holder	1
Second Fuse (1)	2
Second Fuse with additional Safety Relay to open in alarm in conditons (2)	3

Note (1): If you need one REVOS-1PH with 2 Fuse&Fuse Holder (Second Fuse), for dimensions see REVOS-2PH (SR7).

Note (2): If you need one REVOS-1PH with 2 Fuse&Fuse Holder + safety relay, for dimensions see REVOS-2PH (SR7).

Note (3): Available only with Analog input

Technical Specifications

General features:	
Cover and Socket material:	PolymericV2
Mounting:	DIN bar (thickness type 1mm Max)
Utilization Category	AC-51 AC-55b
IP Code	20
Method of Connecting	Single Phase load
Delay switch ON/OFF time:	1/2 Period Max

Input features:	
Logic input SSR	5 ÷ 30Vdc 9mA Max (ON ≥ 5Vdc OFF < 4Vdc)

Output features(power device):	
Nominal current in continuous service:	See order code
Max peak current (10ms)	400A for unit type 030 600A for unit type 035 800A for unit type 040
Nominal Voltage range **Ue** :	24÷600V
Repetitive peak reverse voltage **Uimp** :	1200V (480V) 1600V (600V)
Latching current:	250mA
Leakage current:	15mA eff
I^2T value tp=10msec:	780 A^2s for unit type 030 1750 A^2s for unit type 035 3110 A^2s for unit type 040
Frequency range:	47÷70Hz
Power loss (I=Inom):	38W for unit type 030 44W for unit type 035 50W for unit type 040
Isolation Voltage **Ui** :	2500Vac

Environmental installation conditions

Ambient temperature	0-40°C at nominal current. Over 40°C use the derating curve.
Storage temperature	-25°C a 70°C
Installation place	Don't install at direct sun light, where there are conductive dust, corrosive gas, vibration or water and also in salty environmental.
Altitude	Up to 1000 meter over sea level. For higher altitude reduce the nominal current of 2% for each 100m over 1000m
Humidity	From 5 to 95% without condense and ice
Pollution Level	Up to 2nd Level ref. IEC 60947-1 6.1.3.2

Derating Curve

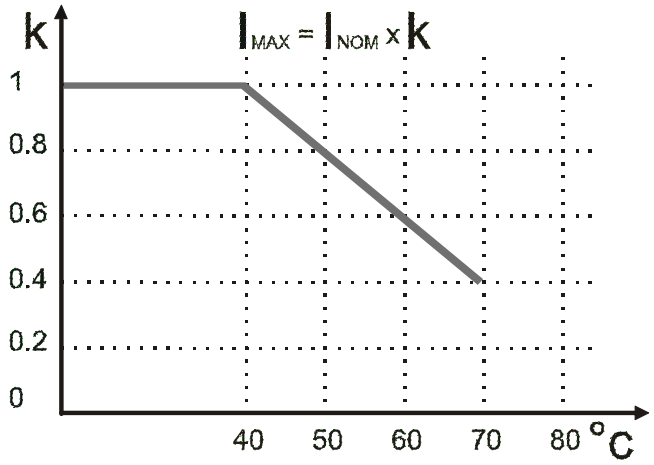

Installation

Before to install, make sure that the Thyristor unit have not damages.
If the product has a fault, please contact the dealer from which you purchased the product.
Verify that the product is the same thing as ordered.
The Thyristor unit must be always mounted in vertical position to improve air cooling on heat-sink.
Maintain the minimum distances in vertical and in horizontal as represented.
When more unit has mounted inside the cabinet maintain the air circulation like represented in figure.
Sometimes is necessary installing a fan to have better air circulation.

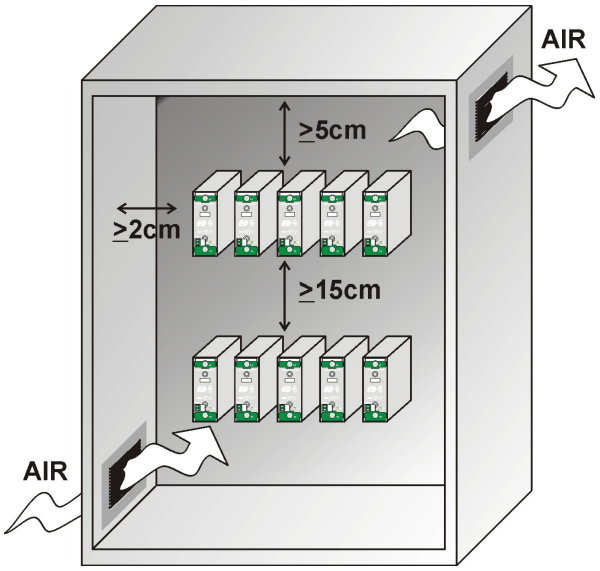

Dimensions and Fixing holes

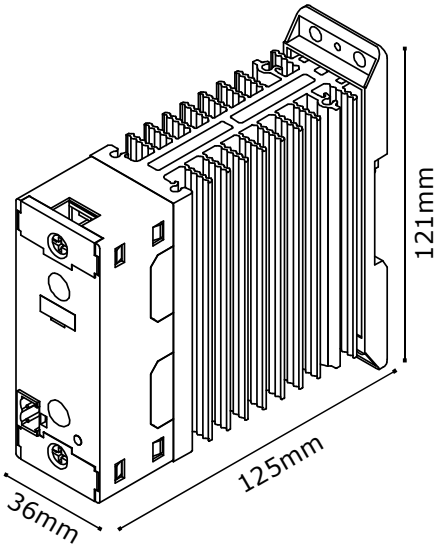

Weight
0,44Kg

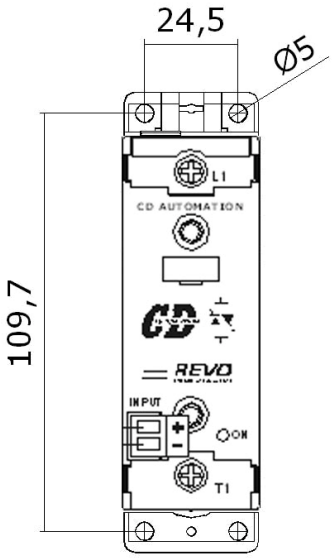

Wiring instructions

The Thyristor unit could be susceptible to interferences lost by near equipments or by the power supply, for this reason in accord to the fundamental practices rules is opportune take some precautions:

- The coil contactor, the relays and other inductive loads must be equipped with opportune RC filter.
- Use shielded bipolar cables for all the input and output signals.
- The signal cables must not be near and parallel to the power cables.
- Local regulations regarding electrical installation should be rigidly observed.

Use copper cables and wires rated for use at 75°C only.

Power cable torque (suggested)

Type	Connector Type	Torque Lb-in (N-m)	Wire Range mm²(AWG)	MAX Current Terminals	Wire Terminals UL Listed (ZMVV)
030 035 040	Screw M5	26.6 (3.0)	1.5-10 (16-8)	50A	Rigid / Flexible Spade Terminal

Cable dimensions of the Command Terminals

0.5mm² (AWG 18)

Cable dimensions of the Earth (suggested)

6 mm² (AWG 10)

Connection Diagram for Single-phase

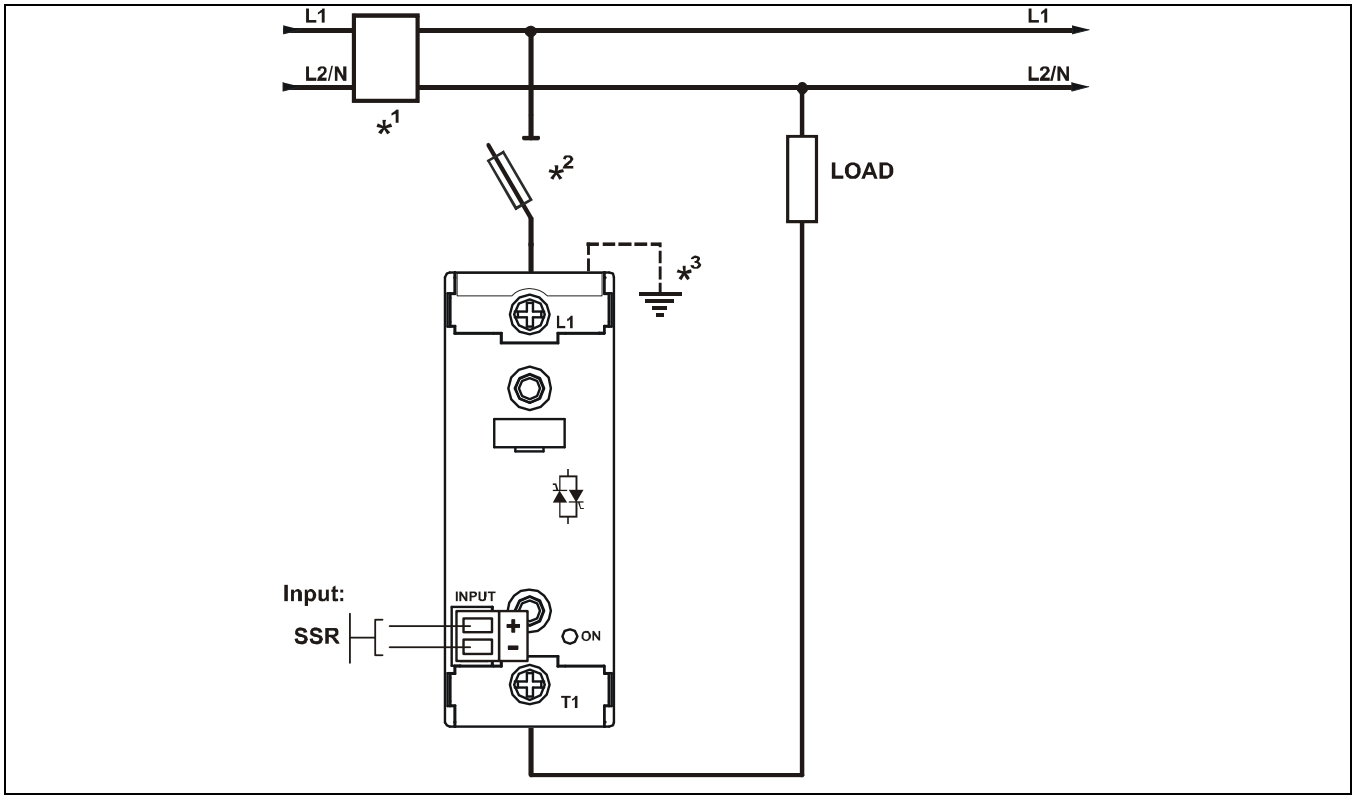

Note:

- **1 A suitable device must ensure that the unit can be electrically isolated from the supply, this allows the qualified people to work in safety.*
- **2 The thyristor unit must be protected by extrarapid fuses (optional). The Fuses must have I²t 20% less than thyristor's I²t. The warranty of thyristor is null if no proper fuses are used (see technical data).*
- **3 The heat-sink must be connected to the earth.*

Firing type

ZC firing mode is used with Logic Output from temperature controllers and the Thyristor operates like a contactor.
The Cycle time is performed by temperature controller. ZC minimizes interferences because the Thyristor unit switches ON-OFF at zero voltage.

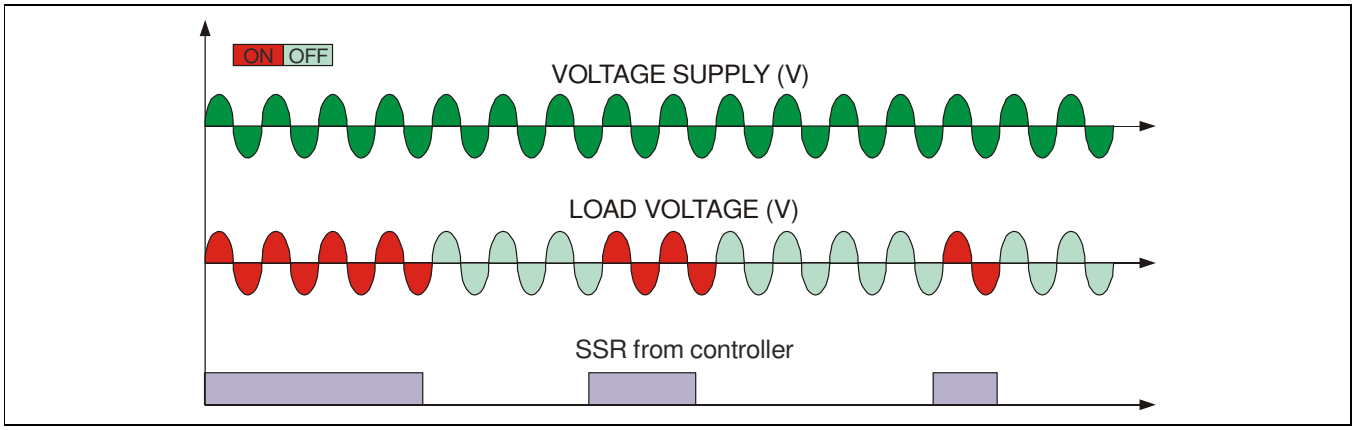

Led status and Alarms

LED	STATUS	DESCRIPTION
ON	○	Load is NOT powered
	●	Load is powered
	○	= OFF
	●	= ON

External Fuse (not included)

The thyristor unit without IFH option (Internal Fuse + Fuse-Holder), must be protected by fuses against short circuit.
The Fuses must have I^2t 20% less than thyristor's I^2t. The warranty of thyristor is null if no proper fuses are used..

Type	Fuse + Fuse-Holder Order Code	Fuse Code Spare Part	Current (ARMS)	I^2T (A^2 sec.)	Vac
030	FFH1451/40A	FU1451/40A	40	980	660
035	FFH1451/50A	FU1451/50A	50	1800	660
040	FFH1451/50A	FU1451/50A	50	1800	660

Caution: *High speed fuses are used only for the thyristor protection and can not be used to protect the installation.*

Caution: *The warranty of thyristor is null if no proper fuses are used. See tab*

External Fuse-holder Dimension (not included)

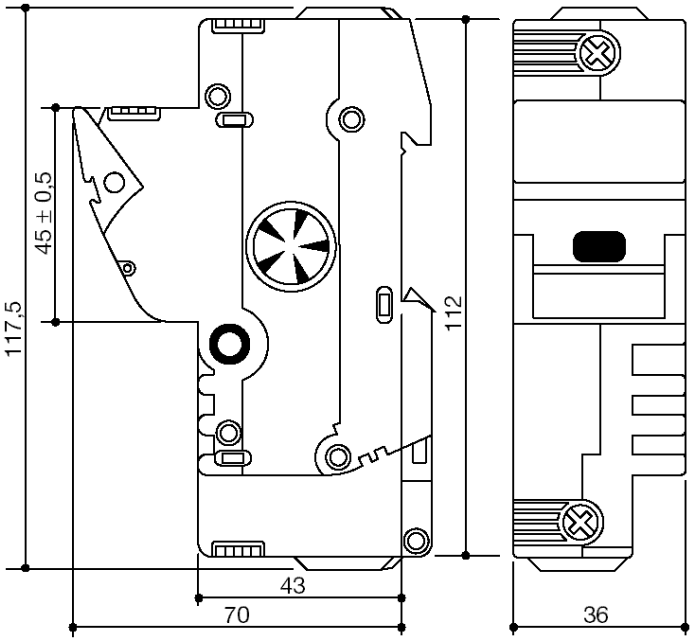

Maintenance

In order to have a corrected cooling, the user must clean the heat-sink and the protective grill of the fans. The frequency of this servicing depends on environmental pollution.
Also check periodically if the screw for the power cables and safety earth are tightened correctly (See Connection Diagram)

Trouble Shooting

Small problems sometimes can be solved locally with the help of the below tab of trouble shooting.
If you don't succeed, contact us or your nearest distributor.

Symptom	Indication on front unit	Possible reasons of the symptom	Actions
Load current doesn't flow	Green LED (ON) light OFF	• No input signal • Reversed polarities of input signal	• Give input signal • Reverse the input signal polarity
	Green LED (ON) light ON	• No voltage power • Fuse failure • Load failure • Thyristor failure	• Check the wiring • Change the fuse • Check the load • Change the module
Load current flow also without input signal	Green LED (ON) always light OFF	• Wrong wiring • SCR short circuit	• Check the wiring • Change the module

Warranty condition

CD Automation gives a 12 months warranty to its products.
The warranty is limited to repairing and parts substitution in our factory and does exclude products not properly used and fuses.
Warranty does not include products with serial numbers deleted. The faulty product should be shipped to CD Automation at customer's cost and our Service will evaluate if product is under warranty terms.
Substituted parts remain of CD Automation property.

CE