09070-10 Magnets shallow pot with counterbore SmCo with stainless-steel housing

Item description/product images

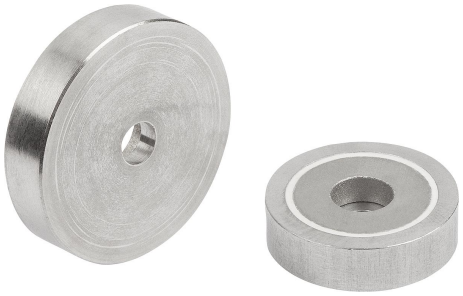

Description

Material:
Housing stainless steel 1.4104.
Magnetic core SmCo (samarium cobalt).

Note:
Shielded system.

Temperature range:
max. 350°C.

Assembly:
The magnets can be mounted by press-fit, screwing-in or gluing.

Drawing reference:
1) magnetic face

Drawings

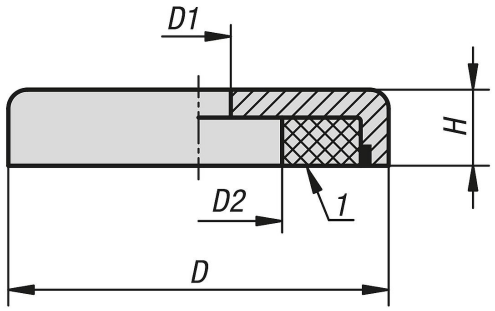

Overview of items

Order No.	D	D1	D2	H	Magnetic force N
09070-10-120	20 ±0,15	4,5	8	6	60
09070-10-125	25 ±0,15	4,5	8	7	80
09070-10-132	32 ±0,2	5,5	11	7	200
09070-10-140	40 ±0,2	5,5	10,5	8	420