Item description/product images

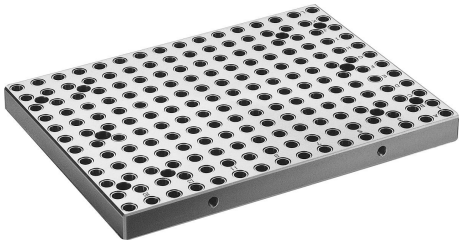

Description

Material:
Grey cast iron GJL 250

Version:
Mounting surfaces ground

Note:
Grid hole pitch 25 ±0.01mm.
Grid hole plugs and ring bolts for lifting are supplied.

Drawings

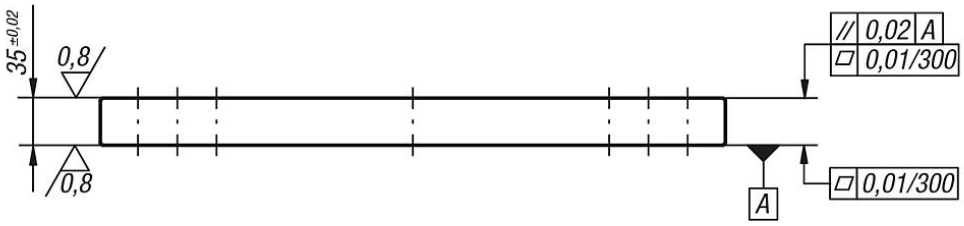

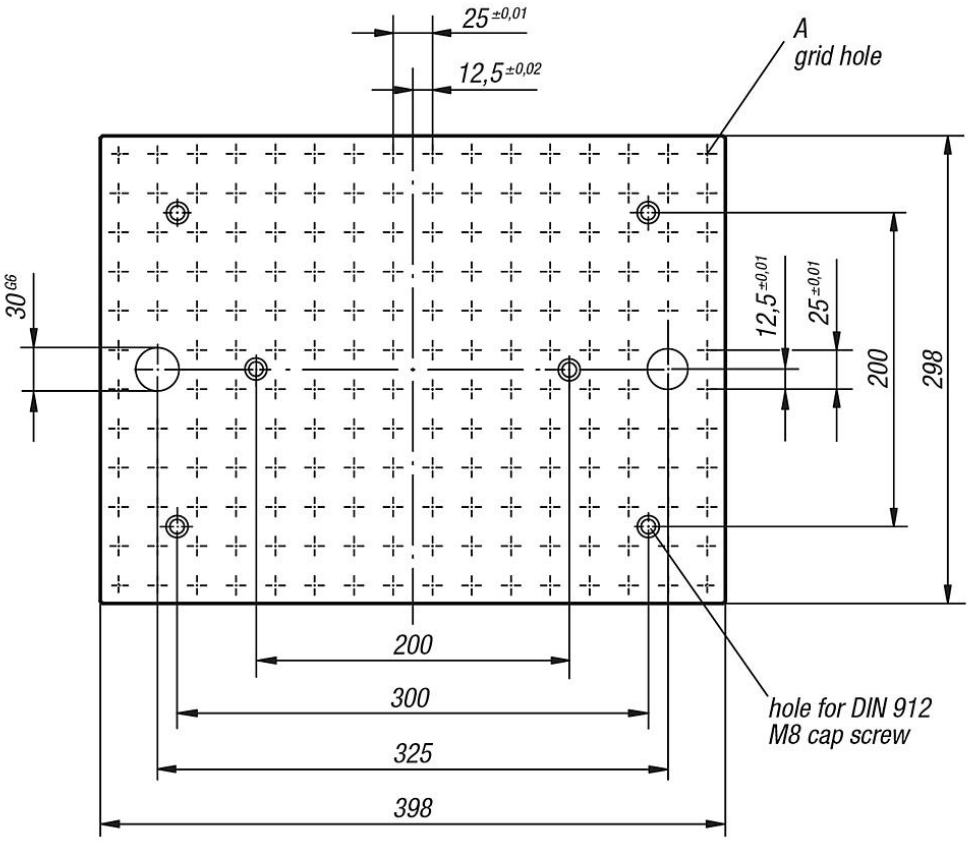

Overview of items

Overview of items