TAS 110

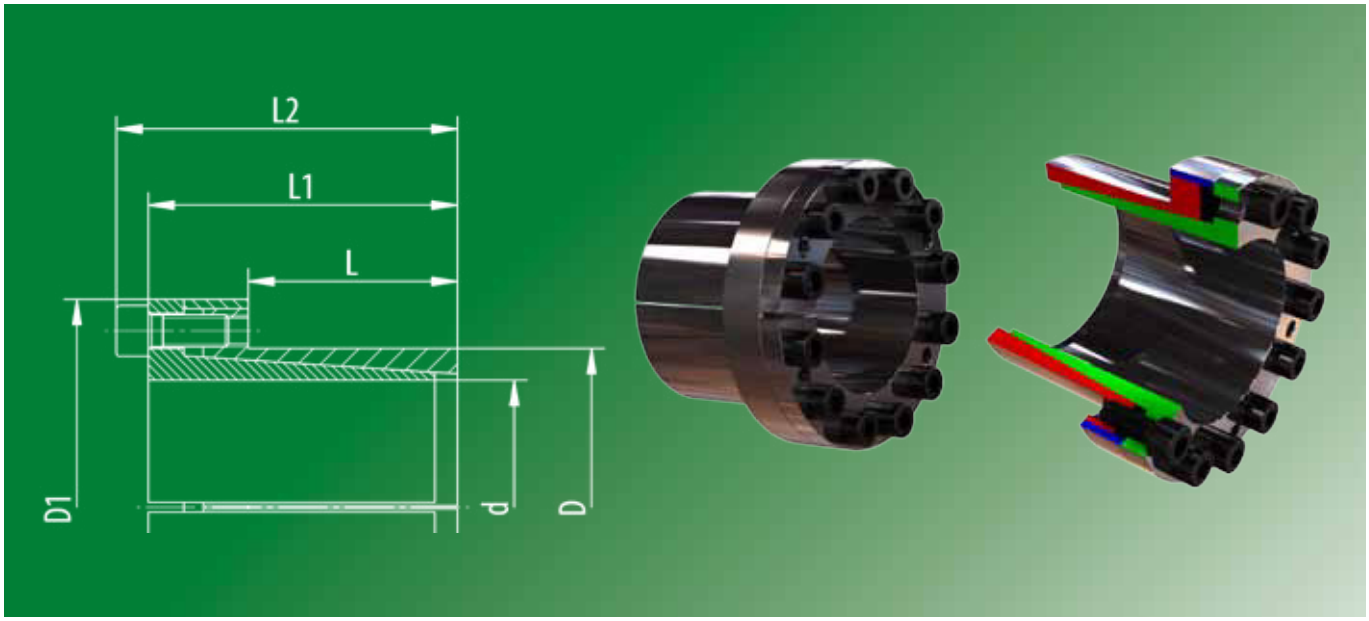

Used symbols

d	[mm]	Shaft diameter	
D	[mm]	Hub inside diameter	
D_1	[mm]	Diameter of the bush	
M_t	[Nm]	Max. transmittable torque	$F_{ax} = 0$
F_{ax}	[kN]	Max. transmittable axial force	$M_t = 0$
p_W	[N/mm²]	Average pressure on the shaft	
p_N	[N/mm²]	Average pressure on the hub	
L	[mm]	Lenght clamping surface of the hub	
L_1	[mm]	Width of the locking device without screws	
L_2	[mm]	Width of the locking device with screws	
Z		Number of clamping screws	
S		Size of the clamping screws	
M_A	[Nm]	Tightening torque of the clamping screws	

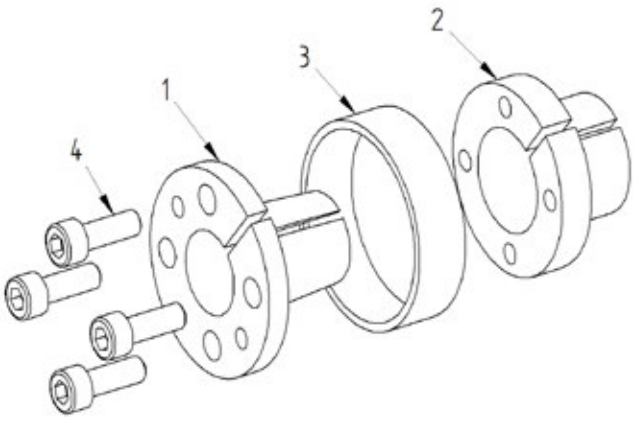

Pos.	Benennung
1	Sleeve
2	Sleeve
3	Outer ring
4	Screw

Recommended tolerances & surfaces

Shaft	h8 / Rz10
Hub	H8 / Rz10

Bending loads

Bending moment (share)	M_B max = 0,25 * M_t
Bending angle	max. 3´

More properties

- no axial displacement during assembly
- good self-centering
- high self-locking

Ordering information: TAS 110/*d/D* (for example: TAS 110/ 10/16 ... further sizes on request)

Changes reserved

TAS 110

d mm		D mm	D_1 mm	M_t Nm	F_{ax} kN	p_W N/mm²	p_N N/mm²	Z Stk	S	M_A Nm	L mm	L_1 mm	L_2 mm	weight kg
6	x	**14**	**25**	11	3,8	158	68	4	M 3 x 10	2,6	10	21,5	24,5	0,04
8	x	**15**	**27**	26	6,5	185	98	3	M 4 x 10	5,6	11,5	25	29	0,06
9	x	**16**	**28**	37	8	174	98	4	M 4 x 10	5,6	14	26	30	0,06
9,525	x	**16**	**29**	39	8	165	98	4	M 4 x 10	5,6	14	26	30	0,06
10	x	**16**	**29**	42	8	158	98	4	M 4 x 10	5,6	14	26	30	0,06
11	x	**18**	**32**	50	9	167	100	4	M 4 x 10	5,6	13,5	26	30	0,07
12	x	**18**	**32**	55	9	151	100	4	M 4 x 10	5,6	13,5	26	30	0,07
14	x	**23**	**38**	100	14	197	120	6	M 4 x 10	5,6	14	26	30	0,11
15	x	**24**	**44**	145	19	209	130	4	M 6 x 18	15	16	36	42	0,22
16	x	**24**	**44**	155	19	196	130	4	M 6 x 18	15	16	36	42	0,22
17	x	**25**	**45**	162	19	185	125	4	M 6 x 18	15	16	36	42	0,22
17	x	**26**	**47**	180	23	185	122	4	M 6 x 18	17	18	38	44	0,23
18	x	**26**	**47**	200	23	177	120	4	M 6 x 18	17	18	38	44	0,23
19	x	**27**	**48**	210	23	170	120	4	M 6 x 18	17	18	38	44	0,24
20	x	**28**	**49**	220	23	166	120	4	M 6 x 18	17	18	38	44	0,25
22	x	**32**	**54**	250	23	104	70	4	M 6 x 18	17	25	45	51	0,33
24	x	**34**	**56**	270	23	99	70	4	M 6 x 18	17	25	45	51	0,35
25	x	**34**	**56**	280	23	95	70	4	M 6 x 18	17	25	45	51	0,34
28	x	**39**	**61**	480	34	127	90	6	M 6 x 18	17	25	45	51	0,42
30	x	**41**	**62**	510	34	116	84	6	M 6 x 18	17	25	45	51	0,43
32	x	**43**	**65**	730	46	154	115	8	M 6 x 18	17	25	45	51	0,50
35	x	**47**	**69**	800	46	111	81	8	M 6 x 18	17	30	50	56	0,55
38	x	**50**	**72**	860	46	102	76	8	M 6 x 18	17	30	50	56	0,60
40	x	**53**	**75**	900	46	96	72	8	M 6 x 18	17	30	50	56	0,65
42	x	**55**	**78**	1800	84	165	125	8	M 8 x 22	41	32	57	65	0,85
45	x	**59**	**85**	1900	84	118	89	8	M 8 x 22	41	40	65	73	1,10
48	x	**62**	**87**	2000	84	99	75	8	M 8 x 22	41	45	70	78	1,10
50	x	**65**	**92**	2600	105	118	90	10	M 8 x 22	41	45	70	78	1,30
55	x	**71**	**98**	2900	105	94	70	10	M 8 x 22	41	50	75	83	1,50
60	x	**77**	**104**	3100	105	90	70	10	M 8 x 22	41	50	75	83	1,70
65	x	**84**	**111**	3400	105	79	60	10	M 8 x 22	41	50	75	83	2,00
70	x	**90**	**119**	5800	170	103	80	10	M 10 x 25	83	60	91	101	2,80
75	x	**95**	**126**	6200	170	91	70	10	M 10 x 25	83	60	91	101	3,00
80	x	**100**	**131**	8000	200	100	80	12	M 10 x 25	83	65	96	106	3,30
85	x	**106**	**137**	8500	200	89	70	12	M 10 x 25	83	65	96	106	3,60
90	x	**112**	**143**	11200	250	112	90	15	M 10 x 25	83	65	96	106	3,90
95	x	**120**	**153**	11800	250	102	80	15	M 10 x 25	83	65	96	106	4,60
100	x	**125**	**162**	14600	300	120	95	12	M 12 x 30	145	65	102	114	5,50
110	x	**140**	**180**	16000	300	77	61	12	M 12 x 30	145	90	128	140	8,30
120	x	**155**	**198**	17400	300	72	55	12	M 12 x 30	145	90	128	140	10,30
130	x	**165**	**208**	25000	389	87	69	16	M 12 x 30	145	90	128	140	10,60