HECO®-SC-S

Outdoor connections of timber on metal structures

PRODUCT INFORMATION

- Fixing timber to steel and aluminium substructures in one step
- High corrosion resistance thanks to stainless steel
- Hardened, zinc-plated drill point
- The ensuring of the correct pre-drill diameter allows an ideal fastening in the substructure
- Increased diameter of the timber bore hole: reduced problems through timber swelling and shrinking
- No discolouration of the timber thanks to stainless steel
- Optimum contact pressure
- Quick, secure and efficient installation
- Countersunk head anchorage in hard- and softwoods

The countersunk head of HECO®-SC-S enables efficient anchorage both in hard- and softwoods

QUICK MOUNTING AND OPTIMUM FIXING

The use of the HECO®-SC-S winged self drilling fasteners provides comprehensive advantages for long-lasting outdoor fixing of timber to metal profiles.

The HECO®-SC-S winged self drilling fasteners are used to fix planks, boards and decking to steel and aluminium substructures. Rapid installation is ensured because the fastener penetrates the timber first and then the metal in a single operation. Metal thicknesses of up up to 5 mm can be handled self-drilling and -tapping, providing optimum fixing every time. The countersunk head finishes flush in both hard and soft wood and as the fasteners are produced in stainless steel there is no discolouration.

Fixing timber cladding to steel substructures with the system HECO®-SC-S also outside.

INSTALLATION

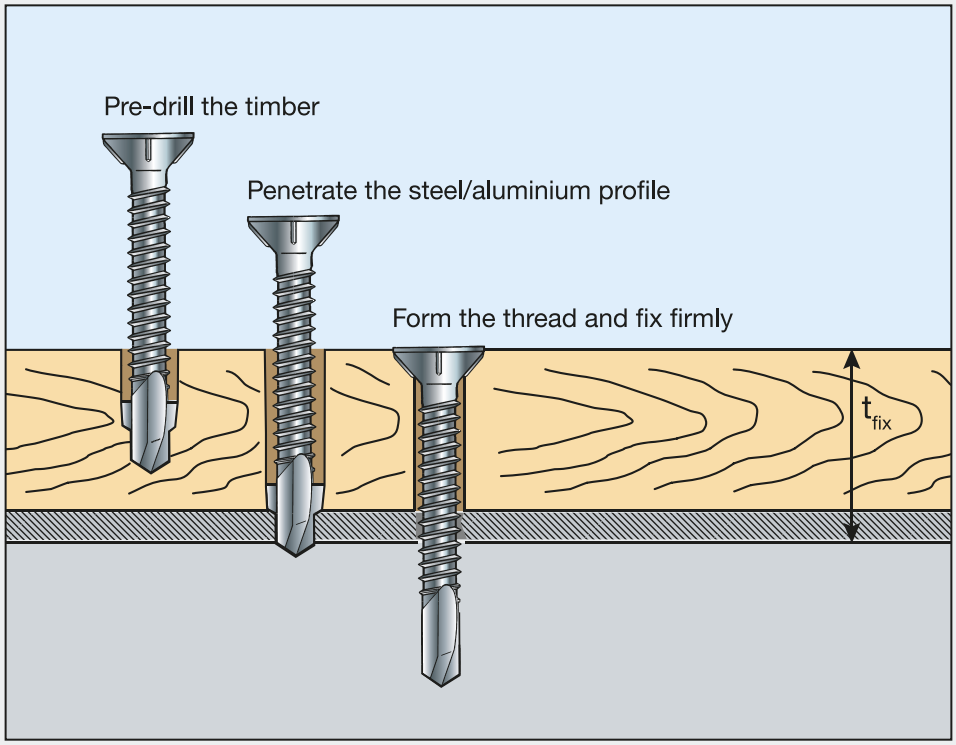

APPLICATION EXAMPLES

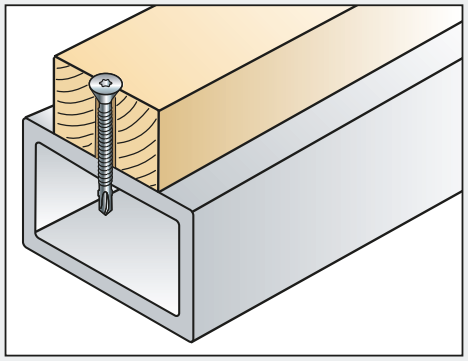

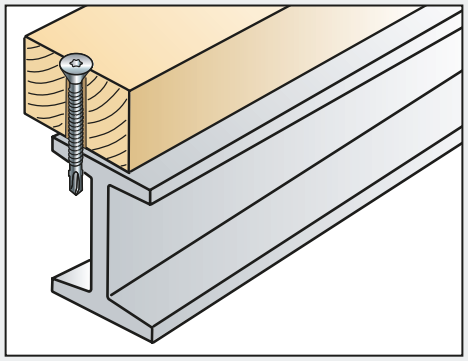

PRODUCT RANGE

HECO®-SC-S winged self-drilling screw, countersunk head, PH-Drive/T-Drive, full/part threaded, stainless steel A2, bright zinc plated

Size D x L [mm]	Article No.	Head diameter [mm]	Drilling capacity [mm] Steel S235	Drilling capacity [mm] Aluminium	Clamping strength t_{fix} [mm]	Recess	Packing unit [pcs.]
4,8 x 42	53357	10	1 – 3	2 – 3	25	PH-2	100
4,8 x 72	53358	10	1 – 3	2 – 3	55	PH-2	100
5,5 x 55	53359	10	2 – 5	3 – 5	34	T-30	100
5,5 x 75	53360	10	2 – 5	3 – 5	54	T-30	100

t_{fix} = Thickness of the complete decking (timber + metal)